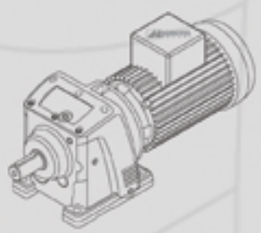

ผู้นำเข้าและจัดจำหน่าย

บริษัท ยูโรแมค คอร์ปอเรชั่น จำกัด

EUROMACH CORPORATION., LTD.

545 ถ.เลียบคลองภาษีเจริญฝั่งเหนือ แขวงหนองแขม เขตหนองแขม กทม. 10160

545 North-Leabklongpasricharoen Rd. Nongkhame, Bangkok 101610, Thailand.

Tel. 662-8120371-5, 662-812-2984 (Auto)

Fax. 662-812-3995, 662-812-0299

www.euromachthailand.com

MODERNA MOTORI

Helical Gear Reducer (German Model)

SGS ISO 9001:2008 · UKAS QUALITY MANAGEMENT 005 · D&B D-U-N-S® Registered™

***Mounting Dimension interchange with German Model

MODERNA MOTORI

TABLE OF CONTENTS

Helical Gear Reducer (German Model)

Product Overview 1

Operation Manaul 2

General Problems & Improvement 4

Variant 5

Order Code 9

Determining the Service Factor 10

Mounting Positions 11

Lubricant Volume 14

Selection Table, Tolerances 15

Dimension Sheets 75

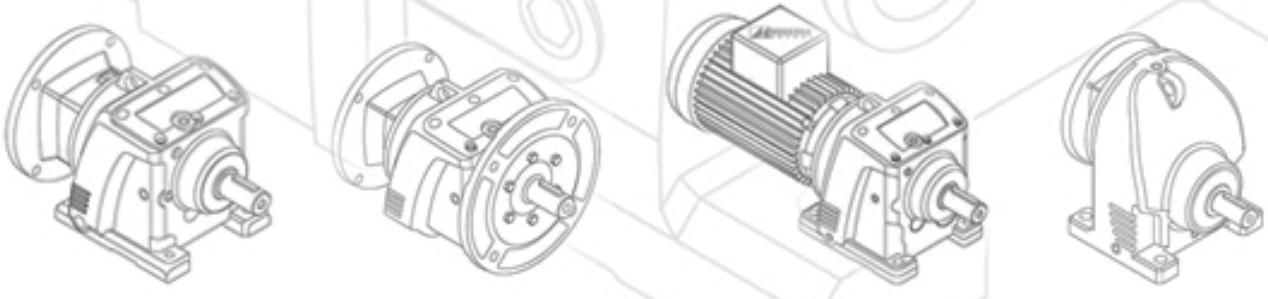

SGS UKAS D&B D-U-N-S® Registered™

***Mounting Dimension interchange with German Model

In-line Helical Gear Reducers

Advantages

1>Design Concepts: The combination of standardization and modularization allows interchangeability with international leading brands, while keeping structure rigidity and compactness.

2>Energy Efficiency: Leveraging the advantage of high accuracy of helical gears, the reducers perform at 90% efficiency with higher stability and lower noise level.

3>Ratios Coverage: The ratio ranges between 1/1.3 ~ 1/27788, providing wide range of ratio accommodation, with 1-3 stages of reduction.

4>Loading Capacity: Available with power ranges from 1/4HP up to 150HP, depending on different requirements and applications.

5>Tensile Strength: Pinion and gears are made with 20CrMo alloy steel plus carburizing heat treatment to enhance performance; the input pinion is equipped with double bearing support to provide stability at high speed.

6>Complete Series: Vertical and horizontal mounting along various input mechanism ensure our products meet wide range of applications.

7>Installation Flexibility: All models are designed for a choice of mounting position (M1~M6) specified by customers.

8>Appearance Aesthetics: The reducers are designed with modern exterior while maintaining high rigidity.

Operation Manual

· This operation manual is to help you install and operate speed reducer correctly. To avoid damages to the speed reducers, proper installation and operation is very crucial. This manual also includes official recommendations on maintenance for an extended lifespan of speed reducers.

· MODERNA speed reducer passed strict inspection and testing before being properly packaged for shipping. Upon receipt of the speed reducer, please check for any shortage or damage of parts during transit.Please be sure to contact MODERNA for identification of responsible carrier and made record of the issue. We are committed to excellence in quality and devoted to solving problems for our clients.

I. Installation

1. Flexible couplings are preferred when input shaft connects directly to the motor; gear couplings are preferred on the output shaft's connection to the application.
2. Install on a stable base with good air ventilation; the accessibility of oil filling / draining should be considered.
3. The input shaft of the reducer and the motor shaft should be in alignment within the tolerance allowance.
4. After installation, please turn the input shaft manually first to check for any locking.
5. No-load running test should be performed first; any abnormality should be corrected prior to regular operation.

II. Lubrication

1. The first oil change should be performed after 500 hrs of operation; subsequent oil change is needed every 2,500 hrs of operation. Nevertheless, a regular check on oil level and conditions are recommended.
2. Please fill only with compatible specifications of oil and do not mix oil of different specifications in a single unit.
3. The interior of the reducer should be flushed and drained before filling with fresh oil.
4. Please shut the reducer immediately for inspection if the temperature rises above 80°C or any abnormal noise occurred. Restart only after the issues identified and cleared.
5. Lubricant recommendation: MOBIL Gear 632, SHELL Omala 320, MOBIL Mobilube HD80W-90, SHELL Spirax E.P 90.
6. Unless specified otherwise by the customer, every MODERNA speed reducer is supplied with appropriate amount of lubrication according to different installation position before shipping. If customer prefers to fill in the lubricant oil post shipment, please follow the instruction section of this catalog.

III. Storage

1. If the speed reducer is not for immediate installation, please keep the unit away from humidity and heat sources. After extended period of storage, please contact our service personnel for instruction on restoring the original performance prior to installation.

IV. Attachments the parts on reducer's shaft

1. Notice: Avoid heavy impact on shafts! It may cause bearing damages and undermines bearing performances. If bearings are to be replaced, we recommend heating method, which heats the bearing above 80℃ , that would allow a clear fit on the shafts and reduce the damage to the bearing. For the tolerance of shaft's diameter, please refer to the specification in catalog.
2. While installing the coupling, make sure to check the alignment of coupling and shaft of speed reducer properly to eliminate the damage on bearings and reduce to vibration frequency and abnormal wear.
3. To avoid overload on the bearings of output shaft, please refer to the OHL (overhung loading) in catalog. For exceeding axial load, please contact our service engineer for consultation.
4. The actual application of following factors such as input and output speed, direction of rotation, installation site and over axial and radial loading should be carefully examined.

V. Installation & Operation

1. The underlying factors should be taken into consideration:
   * Ambient temperature below 40℃
   * Location with good air ventilation
   * Proper positions for oil plug and drain plug
   * Sufficient space for periodical inspection, maintenance, and replacement
2. It is necessary for the unit to be installed on a flat, stable and rigid base for accurate alignment to prevent damages to the reducer's housing.
3. The suggested tolerance of flatness on base:
   * For size 77 or smaller: < 0.1mm/m
   * For size 87 or bigger: < 0.2mm/m
4. To avoid the lubricant splash out during the transportation, breather plug with red pin inserted into air breathing hole. Please remove the red pin before start-up.
5. Before installation, please check the input horsepower and ratio to be the same as the punched name plate of reducer.

VI. Caution

Caution! The power should be turned off before removal or replacement of the reducer.

1. Oil level and quality lubricant is key point of daily maintenance. Please refer to our suggestion to change the lubricant periodically according to operation frequency site situation.
2. Check the alignment of coupling, the tightness of chain, and nuts and keep the reducer away from excessive dust and grease externally .

General Problems & Improvements

The following lists are general problem situations. In case that other problems happen, please contact us directly to get more information.

CAUSE	REASON	IMPROVEMENT
I. Overheat	1. Overload 2. Lubricant oil overfill or shortage 3. Improper lubricant oil 4. Extra friction on oil seal(lack of lubricant)	1. Adjust to proper loading 2. Add lubricant to the level of oil gauge 3. Chang proper lubricant oil 4. Lip lubricant at oil seal
II. Noise	1. Consistent noise { improper gears contact; bearing damaged 2. Screaming noise { bearing gap too small; lubricant oil shortage 3. Inconsistent noise { some object insert; bearing damaged	1. { Repair gears; Replace bearing 2. { Replace bearing; Fill in lubricant oil 3. { Remove debris & replace lubricant oil; Replace bearing
III. Vibration	1. Gear wear 2. Debris inside 3. Bearing worn-out or damaged 4. Bolt loose	1. Replace gear 2. Remove debris & replace lubricant oil 3. Replace bearing 4. Tighten bolt
IV. Oil Leakage	1. Oil seal damage 2. Gasket damage 3. Loose drain plug 4. Loose covers or flange	1. Replace oil seal 2. Replace gasket 3. Tighten drain plug 4. Tighten the bolts
V. Input and Output Shaft Fail	1. Gear-bound caused by overheat 2. Bearing damage 3. Debris between gears	1. Adjust or replace gears 2. Replace bearing 3. Remove debris; clean inside then replace lubricant oil
VI. Input shaft fail to drive output shaft	1. Gear wear 2. Damage to key connecting gear and output shaft 3. Input shaft rupture 4. Output shaft rupture	1. Replace gears 2. Replace key 3. Replace input shaft 4. Replace output shaft
VII. Gear Worn-out	1. Overload 2. Improper lubricant oil 3. Lubricant oil shortage 4. Excessive ambient temperature	1. Adjust to proper loading 2. Change proper lubricant oil 3. Refill lubricant oil 4. Ventilation improvement

Variants

R...Couple with Motor

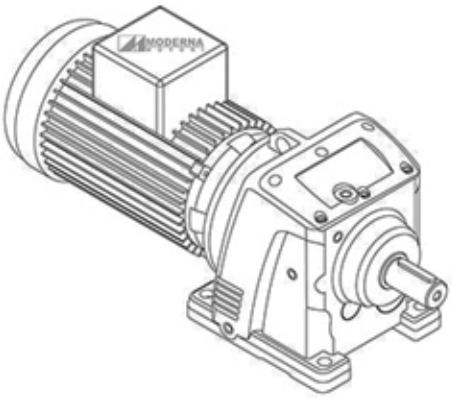

LHM...

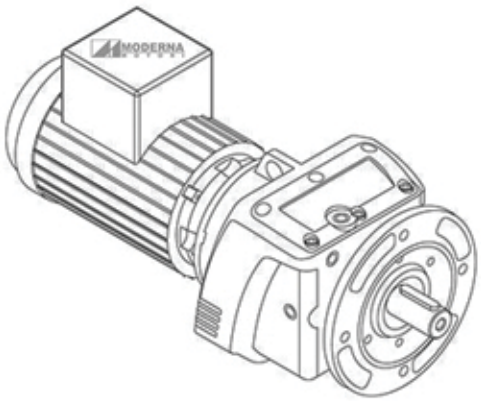

LVM...

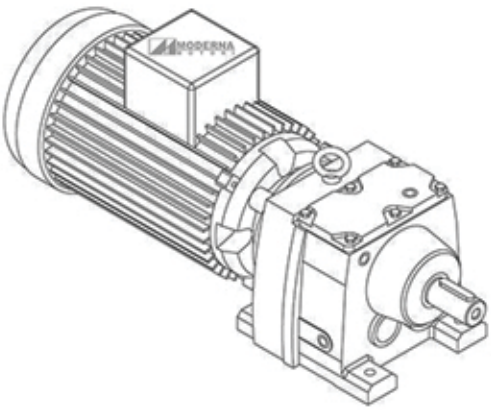

MHM...

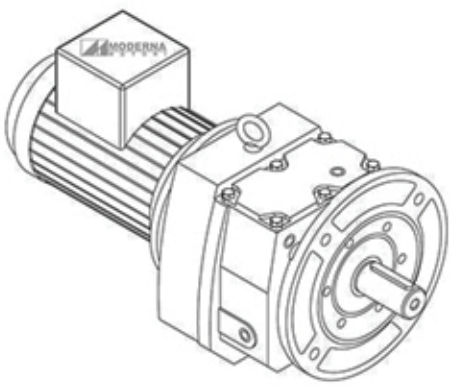

MVM...

R...Input Flange

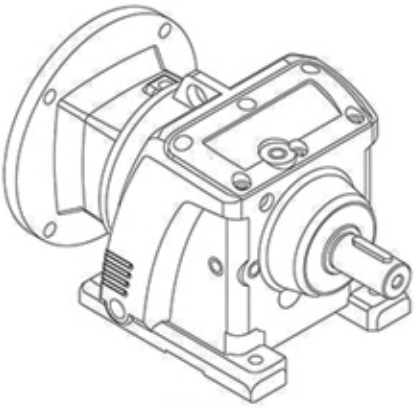

LHN...

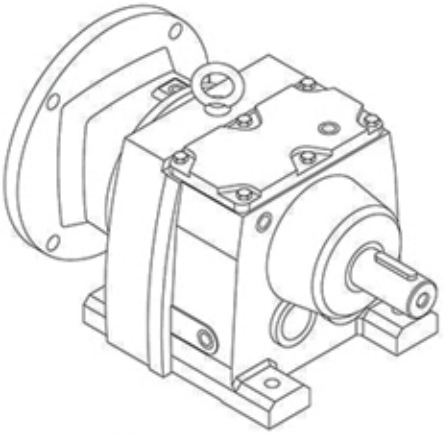

MHN...

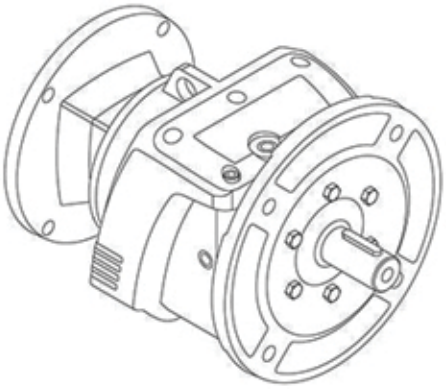

LVN...

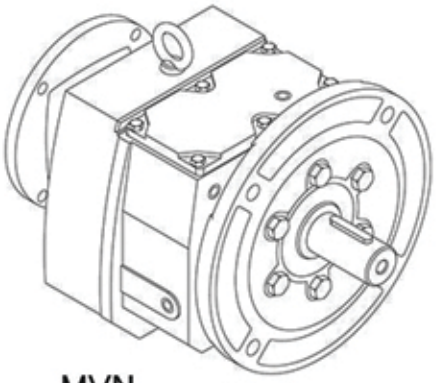

MVN...

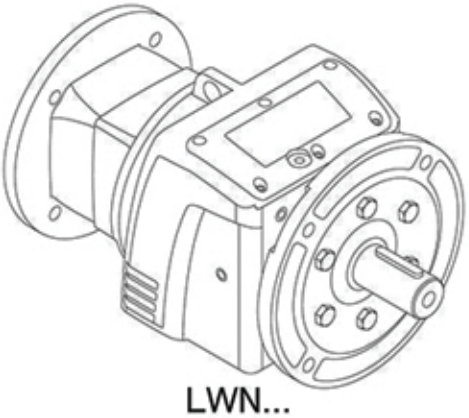

LWN...

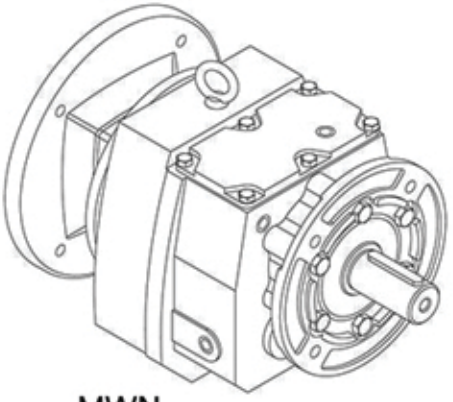

MWN...

R...Solid Input Shaft

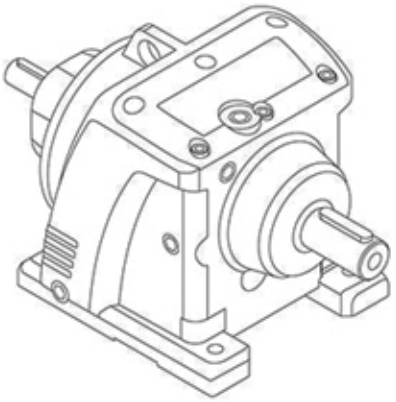

LHD...

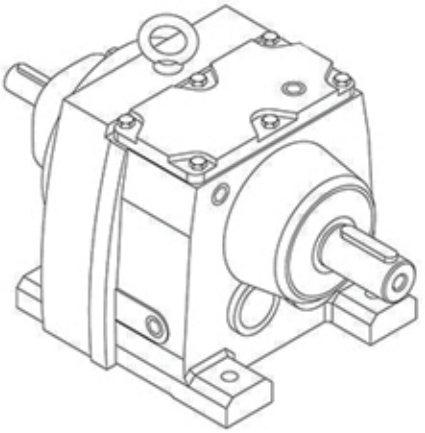

MHD...

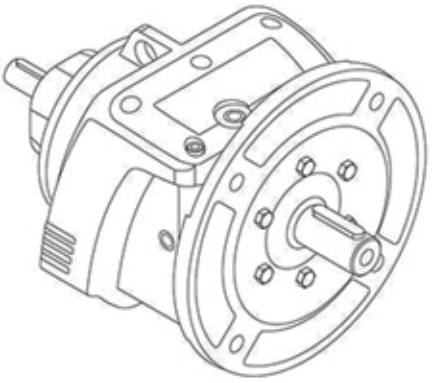

LVD...

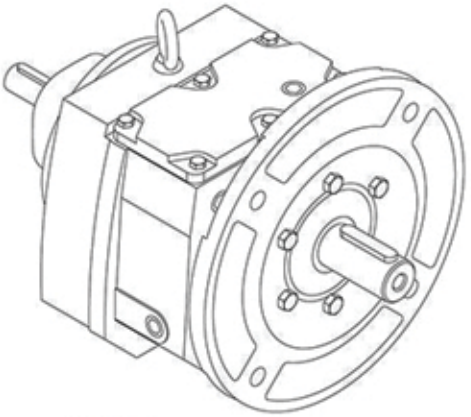

MVD...

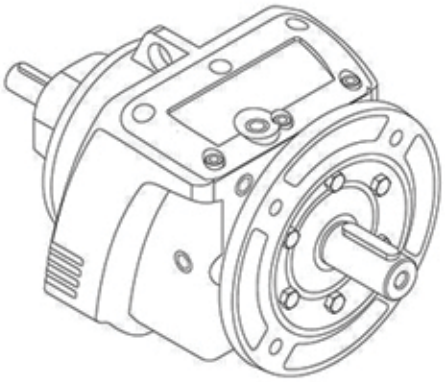

LWD...

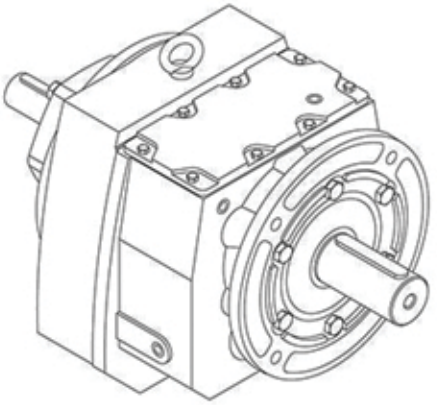

MWD...

RX...

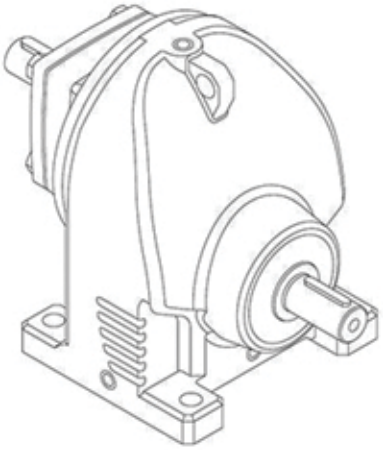

XHD...

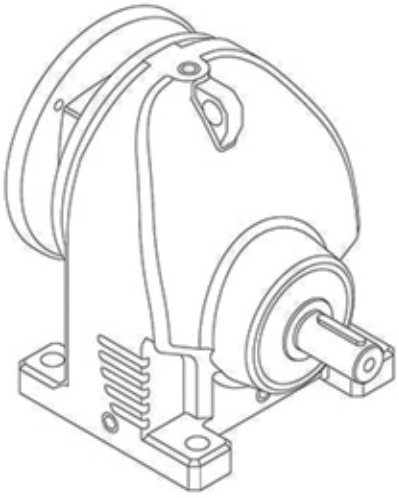

XHN ...

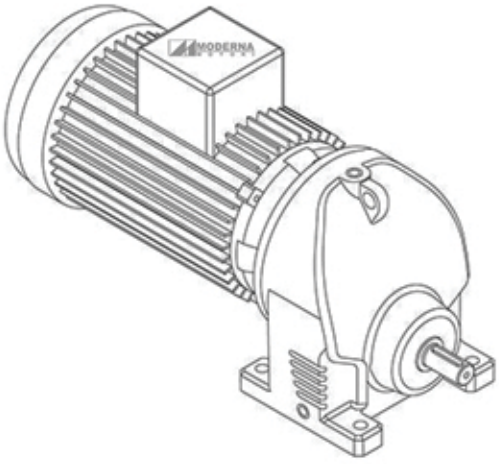

XHM...

Order Code

Column only for Couple with Motor

L H M 097 199 03 1 L V 6 4 U

- L — Helical Gear
- H — Model
- M — Input Type
- 097 — Size
- 199 — Ratio
- 03 — Flange Frame/Input Shaft DIA
- 1 — Mounting Positions
- L — Paint
- V — Voltage
- 6 — Hz
- 4 — Pole
- U — Position of Terminal Box

Model

RX..

XH Foot Mounting

R...(37-97)

LH Foot Mounting

LV Flange Mounting

R...(17,107-167)

MH Foot Mounting

MV Flange Mounting

Input Type

F Input Flange IEC B5

B Input Flange IEC B14

N Input Flange NEMA

D Solid Input Shaft

M Couple With Motor

Size

017 : 17
037 : 37
047 : 47
057 : 57
067 : 67
077 : 77
087 : 87
097 : 97
107 : 107
137 : 137
147 : 147
167 : 167

Ratio

004 : 1/4

≀

201 : 1/201

Flange Frame/ Input Shaft DIA

IEC Standard 4-Pole	NEMA Standard	Input Shaft DIA
QQ : 1/4HP	01 : 56C	0.625
HH : 1/2HP	02 : 143T	0.750
01 : 1HP	04 : 182/184T	0.875
02 : 2HP	06 : 213/215T	1.125
03 : 3HP	08 : 254/256T	1.375
05 : 5HP	10 : 284/286T	1.625
07 : 7.5HP	12 : 324/326T	1.875
10 : 10HP	14 : 364/365T	2.125
15 : 15HP	16 : 404/405T	
20 : 20HP		

Mounting Positions

M1、M2、M3、M4、M5、M6

Paint

L : Gray

Voltage

2 : 220/380	C : 220/400	H : 200/346
4 : 240/415	D : 230/400	K : 208/220
5 : 220/440	E : 230/440	M : 208/240
A : 220/230	F : 240/480	N : 380/660
B : 220/240	G : 120/208	V : 208~480

Hz

5 : 50Hz
6 : 60Hz

Pole

2 : 2P
4 : 4P
6 : 6P
8 : 8P

Position of Terminal Box

U、D、L、R

Determining the Service Factor

The service factor is determined along with the daily operating time (hours/day), operating condition (continuous or intermittent) and level of load; for a proper gear selection, please determine the service factor accordingly.

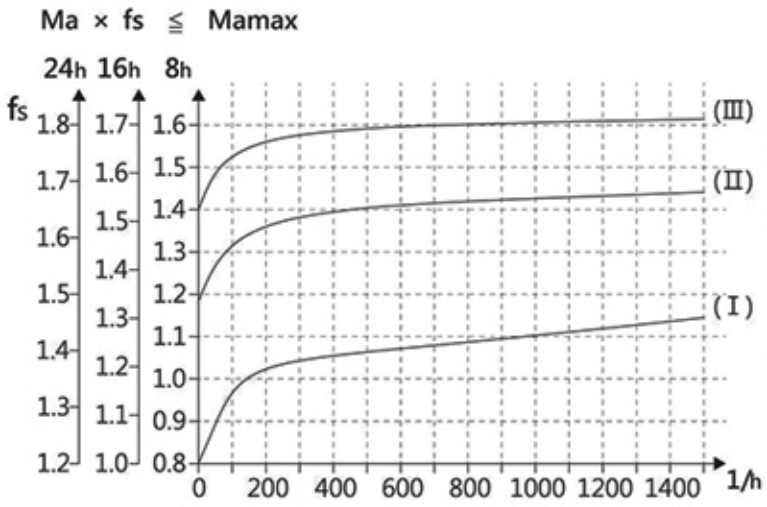

Service Factor

Load

Ⅰ Light shocks : mass acceleration factor ≦ 0.2

Classification

Ⅱ Moderate shocks : mass acceleration factor ≦ 3

Ⅲ Heavy shocks : mass acceleration factor ≦ 10

$$\text{Mass acceleration factor} = \frac{\text{all exterior moments of inertia}}{\text{moments of inertia drive motors}}$$

[All exterior moments of inertia] - recalculated to motor speed, formula

$$J_X = J \times \left(\frac{n}{n_M}\right)^2$$

J_X : mass moment of inertia scaled down to the motor shaft

J : mass moment of inertia with reference to the output speed of the gear unit

n : output speed of the gear unit n_M : motor speed

Calculation of service factor

$$fs = \frac{Mamax}{Ma}$$

Mamax : the maximum permitted continuous torque

Ma : output torque of the gear unit

EX If the mass acceleration factor is 2.5 (Moderate shocks Ⅱ), the operating time is 14 hours per day in an intermittent condition by 300 times per hour. We can acquire fs=1.51 from the fs chart; according to selection tables, we will know to select the gear unit with fs ≧ 1.51.

Mounting Positions

R....
LH.. 37-97
MH.. 17
MH.. 107-167

Position of Terminal Box
Standard position "U", unless specific requirements

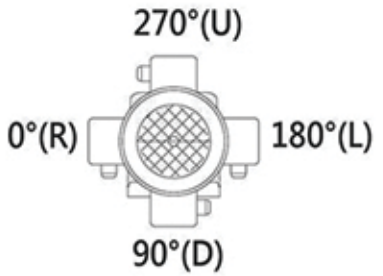

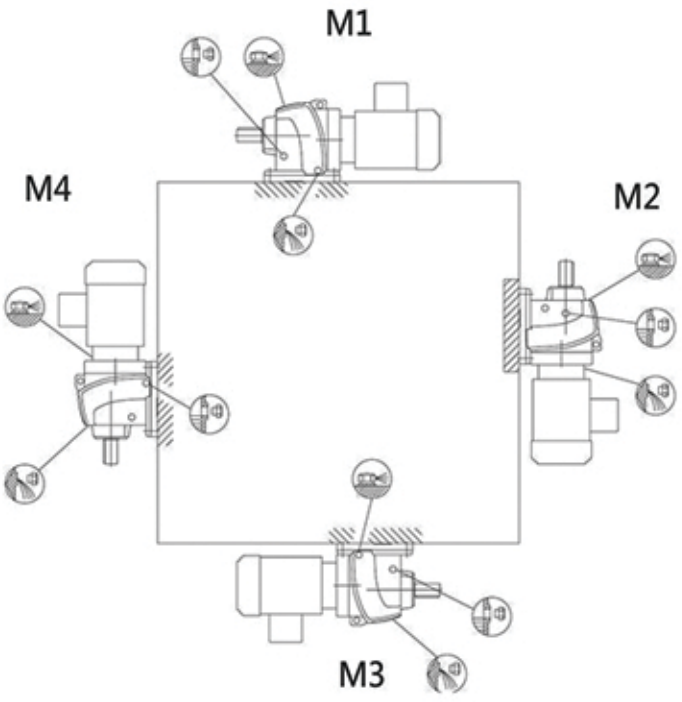

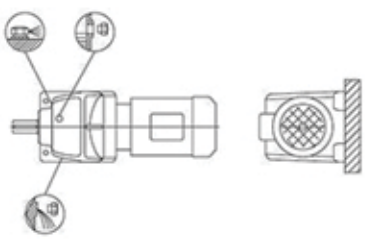

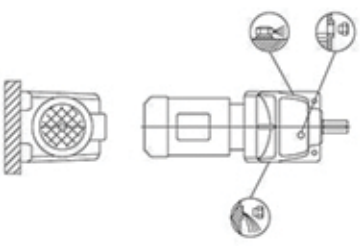

R....
LV../LW.. 37-97
MV.. 17
MV../MW.. 107-167

Position of Terminal Box

Standard position "U", unless specific requirements

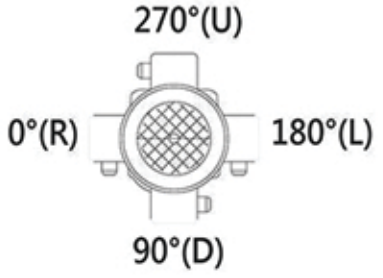

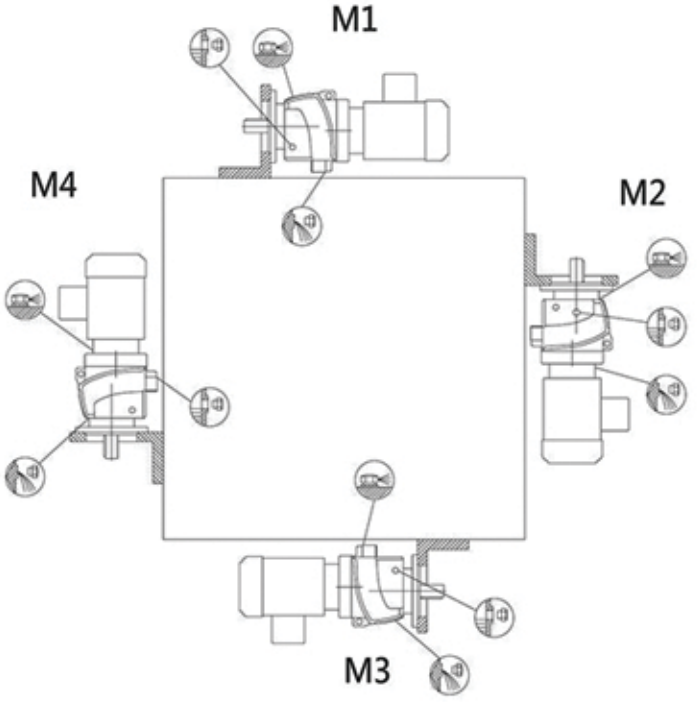

M5

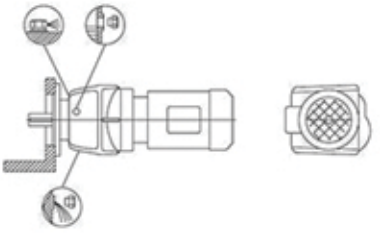

M6

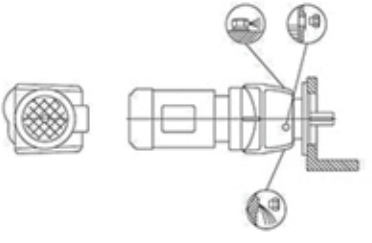

RX....
XH.. 57-107

Position of Terminal Box

Standard position "U", unless specific requirements

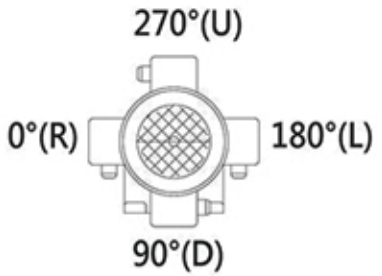

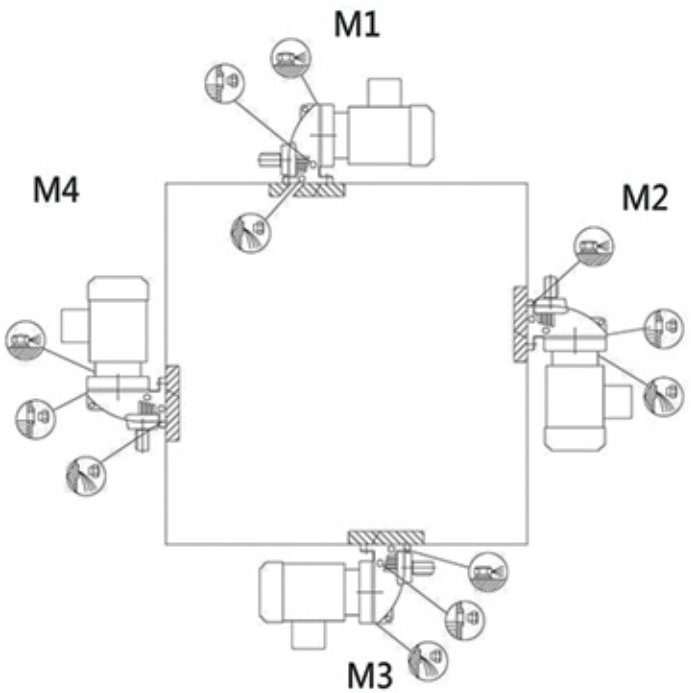

M5

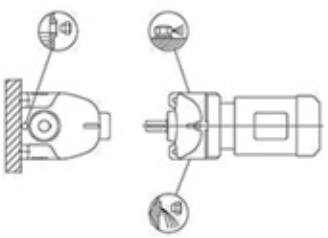

M6

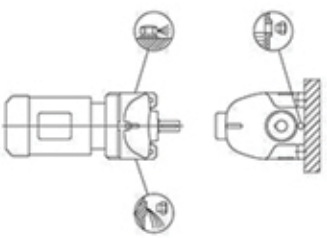

Lubricant Volume

In-Line Helical Gear units

R type: LHN, LHD, MHN, MHD

Gear units	Oil Volume (liters)					
	M1	M2	M3	M4	M5	M6
M..17	0.25	0.55	0.35	0.55	0.35	0.35
L..37	0.30	0.85	0.95	1.05	0.75	0.95
L..47	0.70	1.60	1.50	1.65	1.50	1.50
L..57	0.80	1.90	1.70	2.10	1.70	1.70
L..67	1.10	2.60	2.80	3.20	1.80	2.00
L..77	1.20	3.80	3.60	4.10	2.50	3.40
L..87	2.30	6.70	7.20	7.70	6.30	6.50
L..97	4.60	11.70	11.70	13.40	11.30	11.70
M..107	6.00	16.30	16.90	19.20	13.20	15.90
M..137	10.00	28.00	29.50	31.50	25.00	25.00
M..147	15.40	46.50	48.00	52.00	39.50	41.00
M..167	27.00	82.00	78.00	88.00	66.00	69.00

R type: LVN, LVD, LWN, LWD, MVN, MVD, MWN, MWD

Gear units	Oil Volume (liters)					
	M1	M2	M3	M4	M5	M6
M..17	0.25	0.55	0.35	0.55	0.35	0.35
L..37	0.35	0.90	0.20	1.05	0.75	0.95
L..47	0.65	1.60	1.50	1.65	1.50	1.50
L..57	0.80	1.80	1.70	2.00	1.70	1.70
L..67	1.20	2.70	2.70	2.60	1.90	2.10
L..77	1.20	3.80	3.30	4.10	2.40	3.00
L..87	2.40	6.80	7.10	7.70	6.30	6.40
L..97	5.10	11.90	11.20	14.00	11.20	11.80
M..107	6.30	15.90	17.00	19.20	13.10	15.90
M..137	9.50	27.00	29.00	32.50	25.00	25.00
M..147	16.40	47.00	48.00	52.00	42.00	42.00
M..167	26.00	82.00	78.00	88.00	65.00	71.00

RX type: XHN, XHD

Gear units	Oil Volume (liters)					
	M1	M2	M3	M4	M5	M6
X..57	0.60	0.80	1.30	1.30	0.90	0.90
X..67	0.80	0.80	1.70	1.90	1.10	1.10
X..77	1.10	1.50	2.60	2.70	1.60	1.60
X..87	1.70	2.50	4.80	4.80	2.90	2.90
X..97	2.10	3.40	7.40	7.00	4.80	4.80
X..107	3.90	5.60	11.60	11.90	7.70	7.70

Selection Tables

L/M/X..F/..M

Pm [kW]	na [1/min]	Ma [Nm]	i	FRa [N]	fs			m [kg]
[1]	[2]	[3]	[4]	[5]	[6]	[7]	[8]	[9]

[1] Rated power driving motor

[2] Output speed

[3] Output torque

[4] Gear unit reduction ratio

[5] Permissible overhung load output side

[6] Service factor

[7] Gear unit size

[8] Motor type

[9] Weight

Tolerances

Shaft heights

The following tolerances apply to the indicated dimensions:

h	≦ 250 mm	→ -0.5 mm
h	> 250 mm	→ -1 mm

Foot-mounted gear units: Check the mounted motor because it may project below the mounting surface.

Shaft ends

Diameter tolerance:

Ø	≦ 50 mm	→ k6
Ø	> 50 mm	→ m6

Center bores

Ø	> 24...30 mm	→ M10	Ø	> 50...85 mm	→ M20
Ø	> 30...38 mm	→ M12	Ø	> 85...130 mm	→ M24
Ø	> 38...50 mm	→ M16			

Output Flanges

Centering shoulder tolerance:

Ø h7

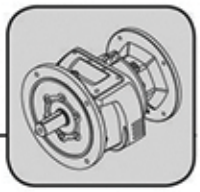

1400Rpm Selection Tables

R..F/..M

Pm [kW]	na [1/min]	Ma [Nm]	i	FRa [N]	fs	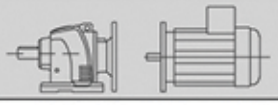		m [kg]
0.12 (0.16HP)	0.07	14475	21238	62700	0.90			
	0.08	12635	18540	62700	1.03			
	0.08	11433	16776	62700	1.14			
	0.09	10454	15340	62700	1.24			
	0.10	9239	13556	62700	1.41	MH147 R77		404
	0.12	8139	11942	62700	1.60	MV147 R77	63	396
	0.14	6672	9791	62700	1.95	MW147 R77		380
	0.17	5735	8415	62700	2.27			
	0.19	4951	7264	62700	2.63			
	0.22	4289	6294	62700	3.03			
	0.26	3608	5294	62700	3.60			
	0.11	8753	12843	37500	0.80			
	0.13	7176	10529	37500	0.98			
	0.16	5837	8565	37500	1.20	MH137 R77		264
	0.19	4962	7280	37500	1.41	MV137 R77	63	275
	0.21	4613	6769	37500	1.52	MW137 R77		259
	0.22	4254	6243	37500	1.65			
	0.24	3911	5739	37500	1.79			
	0.28	3446	5056	37500	2.03			
	0.18	5293	7767	29500	0.81			
	0.21	4610	6765	29500	0.93			
	0.24	4053	5947	29500	1.06			
	0.28	3403	4993	29500	1.26	MH107 R77		182
	0.30	3138	4605	29500	1.37	MV107 R77	63	185
	0.35	2760	4049	29500	1.56	MW107 R77		174
	0.37	2600	3816	29500	1.65			
	0.41	2317	3400	29500	1.86			
	0.47	2018	2961	29500	2.13			
	0.38	2600	3701	29500	1.65			
	0.42	2353	3349	29500	1.83	MH107 R77		171
	0.46	2152	3062	29500	2.00	MV107 R77	63	175
	0.52	1901	2706	29500	2.26	MW107 R77		164
	0.59	1675	2384	29500	2.57			
	0.72	1373	1955	29500	3.13			
	0.31	3077	4514	18100	0.98	LH97 R57		110
	0.35	2738	4018	18100	1.10	LV97 R57	63	117
	0.40	2370	3477	18100	1.27	LW97 R57		106
	0.30	3278	4666	18100	0.92			
	0.33	2995	4262	18100	1.00			
	0.38	2618	3726	18100	1.15			
	0.47	2109	3002	18100	1.42	LH97 R57		108
	0.52	1879	2675	18100	1.60	LV97 R57	63	112
	0.58	1684	2397	18100	1.78	LW97 R57		101
	0.65	1518	2161	18100	1.98			
	0.80	1230	1750	18100	2.44			
	0.83	1188	1691	18100	2.53			
	0.47	2112	3006	18100	1.42			
	0.50	1978	2816	18100	1.52			
	0.60	1641	2336	18100	1.83			
	0.67	1472	2095	18100	2.04	LH97 R57		109
	0.76	1291	1838	18100	2.32	LV97 R57	63	116
	0.81	1216	1730	18100	2.47	LW97 R57		105
	0.90	1091	1553	18100	2.75			
	1.00	985	1402	18100	3.05			
	1.09	903	1285	18100	3.32			
	1.28	766	1091	18100	3.92			

1400 Input Rpm

Pm [kW]	na [1/min]	Ma [Nm]	i	FRa [N]	fs			m [kg]
0.12 (0.16HP)	0.58	1642	2410	16900	0.91	LH87 R57		77
	0.63	1511	2216	16900	0.99	LV87 R57	63	81
	0.71	1347	1977	16900	1.11	LW87 R57		77
	0.54	1811	2577	16900	0.83			
	0.60	1632	2323	16900	0.92	LH87 R57		75
	0.67	1474	2098	16900	1.02	LV87 R57	63	79
	0.74	1322	1882	16900	1.13	LW87 R57		75
	0.77	1277	1818	16900	1.17			
	0.85	1164	1656	16900	1.29			
	0.85	1153	1641	16900	1.30			
	1.03	952	1355	16900	1.58			
	1.26	781	1112	16900	1.92	LH87 R57		77
	1.39	707	1006	16900	2.12	LV87 R57	63	80
	1.70	580	826	16900	2.59	LW87 R57		76
	1.90	517	735	16900	2.90			
	2.22	444	632	16900	3.38			
	2.37	415	590	16900	3.62			
	1.11	885	1259	8620	0.85	LH77 R37		39
	1.27	773	1100	8620	0.97	LV77 R37	63	45
	1.36	721	1026	8620	1.04	LW77 R37		41
	1.50	656	934	8620	1.14			
	1.12	876	1246	8620	0.86			
	1.33	742	1056	8620	1.01	LH77 R37		40
	1.50	654	931	8620	1.15	LV77 R37	63	46
	1.67	589	838	8620	1.27	LW77 R37		42
	1.96	503	715	8620	1.49			
	2.31	426	607	8620	1.76			
	2.72	373	515	8620	2.01			
	3.01	337	465	8620	2.23	LH77 R37		38
	3.36	302	417	8620	2.48	LV77 R37	63	44
	3.81	266	367	8620	2.82	LW77 R37		40
	4.60	221	305	8620	3.40			
	1.64	601	855	7560	1.00			
	1.88	600	745	7560	1.15	LH67 R37		34
	2.12	465	662	7560	1.29	LV67 R37	63	35
	2.53	388	552	7560	1.55	LW67 R37		33
	2.88	342	487	7560	1.76			
	1.67	589	839	7560	1.02			
	1.85	532	757	7560	1.13	LH67 R37		35
	2.17	454	646	7560	1.32	LV67 R37	63	36
	2.55	385	548	7560	1.56	LW67 R37		34
	3.12	316	449	7560	1.90			
	3.77	261	371	7560	2.30			
	1.79	551	784	7110	0.82	LH57 R37		28
	2.14	460	654	7110	0.98	LV57 R37	63	31
	2.30	428	610	7110	1.05	LW57 R37		29
	2.04	482	686	7110	0.93			
	2.39	411	586	7110	1.09	LH57 R37		28
	2.82	349	496	7110	1.29	LV57 R37	63	31
	3.44	286	407	7110	1.57	LW57 R37		29
	3.81	258	368	7110	1.74			
	3.77	269	371	7110	1.68			
	4.24	239	330	7110	1.88	LH57 R37		28
	4.55	223	308	7110	2.02	LV57 R37	63	30
	5.07	200	276	7110	2.25	LW57 R37		28
	5.93	171	236	7110	2.63			
	6.52	156	215	7110	2.89			
	2.89	341	485	5420	0.88	LH47 R37		27

1400 Input Rpm

Pm [kW]	na [1/min]	Ma [Nm]	i	FRa [N]	fs			m [kg]
0.12 (0.16HP)	3.52	280	398	5420	1.07	LV47 R37	63	27
						LW47 R37		26
	3.11	326	450	5420	0.92			
	3.45	294	406	5420	1.02			
	3.82	265	366	5420	1.13	LH47 R37		26
	4.26	238	329	5420	1.26	LV47 R37	63	26
	4.84	210	289	5420	1.43	LW47 R37		25
	5.83	174	240	5420	1.73			
	6.49	156	216	5420	1.92			
	7.60	133	184	5420	2.25			
	7.00	149	199.88	7560	4.02	LH67		26
	8.28	126	169.10	7560	4.75	LV67	63	24
	9.27	113	151.03	7560	5.32	LW67		22
	9.95	105	140.75	7560	5.71			
	7.65	137	182.99	7110	3.29			
	8.53	123	164.13	7110	3.67	LH57		20
	9.90	106	141.40	7110	4.26	LV57	63	23
	10.84	96	129.16	7110	4.67	LW57		21
	12.40	84	112.90	7110	5.34			
	13.76	76	101.77	7110	5.92			
	7.83	134	178.83	5420	2.25			
	8.73	120	160.40	5420	2.50			
	10.13	103	138.19	5420	2.91			
	11.09	94	126.22	5420	3.18	LH47		19
	12.69	82	110.34	5420	3.64	LV47	63	17
	14.08	74	99.46	5420	4.04	LW47		17
	15.59	67	89.82	5420	4.47			
	17.37	60	80.58	5420	4.99			
	17.99	58	77.84	5420	5.16			
	19.74	53	70.91	5420	5.67			
	10.12	103	138.36	4950	1.94			
	11.74	89	119.28	4950	2.25			
	13.93	75	100.51	4950	2.66			
	15.30	68	91.53	4950	2.93	LH37		11
	17.55	60	79.77	4950	3.36	LV37	63	12
	18.26	57	76.66	4950	3.49	LW37		11
	20.05	52	69.81	4950	3.84			
	23.01	45	60.84	4950	4.40			
	25.91	40	54.03	4950	4.96			
	26.80	39	52.24	4930	5.13			
	17.53	60	79.85	1770	1.43			
	20.38	51	68.70	1770	1.66			
	23.64	44	59.23	1770	1.92			
	28.05	37	49.90	1770	2.28			
	30.80	34	45.45	1770	2.50	MH17		8
	35.35	30	39.61	1770	2.87	MV17	63	8
	39.81	26	35.17	1770	3.24			
	47.69	22	29.36	1770	3.88			
	56.53	18	24.76	1770	4.60			
	71.10	15	19.69	1770	5.78			
	223.29	5	6.27	3030	8.64			
	255.94	4	5.47	2900	10.00	XH67	63	12
	282.83	4	4.95	2790	10.00			
	255.94	4	5.47	2520	8.50			
	286.89	4	4.88	2430	9.83	XH57	63	10
	307.69	4	4.55	2360	10.00			
0.18 (0.25HP)	0.09	15681	15340	62700	0.83			
	0.10	13858	13556	62700	0.94			

1400 Input Rpm

Pm [kW]	na [1/min]	Ma [Nm]	i	FRa [N]	fs			m [kg]
0.18	0.12	12208	11942	62700	1.06			
(0.25HP)	0.14	10008	9791	62700	1.30			
	0.17	8602	8415	62700	1.51	MH147 R77		404
	0.19	7426	7264	62700	1.75	MV147 R77	63	396
	0.22	6434	6294	62700	2.02	MW147 R77		380
	0.26	5412	5294	62700	2.40			
	0.30	4768	4664	62700	2.73			
	0.35	4128	4038	62700	3.15			
	0.40	3564	3486	62700	3.65			
	0.16	8756	8565	37500	0.80			
	0.19	7442	7280	37500	0.94			
	0.21	6919	6769	37500	1.01	MH137 R77		264
	0.22	6381	6243	37500	1.10	MV137 R77	63	275
	0.24	5867	5739	37500	1.19	MW137 R77		259
	0.28	5169	5056	37500	1.35			
	0.33	4332	4237	37500	1.62			
	0.35	4082	3993	37500	1.71			
	0.31	4814	4568	37500	1.45			
	0.35	4203	3988	37500	1.67	MH137 R77		252
	0.39	3803	3608	37500	1.84	MV137 R77	63	264
	0.42	3477	3299	37500	2.01	MW137 R77		248
	0.48	3073	2916	37500	2.28			
	0.30	4708	4605	29500	0.91	MH107 R77		182
	0.37	3901	3816	29500	1.10	MV107 R77	63	185
	0.47	3027	2961	29500	1.42	MW107 R77		174
	0.38	3901	3701	29500	1.10			
	0.42	3529	3349	29500	1.22	MH107 R77		171
	0.46	3227	3062	29500	1.33	MV107 R77	63	175
	0.52	2852	2706	29500	1.51	MW107 R77		164
	0.59	2513	2384	29500	1.71			
	0.72	2060	1955	29500	2.09			
	0.75	1963	1862	29500	2.19	MH107 R77		180
	0.92	1610	1528	29500	2.67	MV107 R77	63	183
	1.03	1434	1361	29500	3.00	MW107 R77		172
	1.15	1287	1221	29500	3.34			
	0.52	2819	2675	18100	1.06			
	0.58	2526	2397	18100	1.19			
	0.65	2277	2161	18100	1.32			
	0.80	1845	1750	18100	1.63			
	0.83	1782	1691	18100	1.68	LH97 R57		108
	0.91	1624	1541	18100	1.85	LV97 R57	63	112
	1.02	1451	1377	18100	2.07	LW97 R57		101
	1.10	1347	1278	18100	2.23			
	1.27	1159	1099	18100	2.59			
	1.43	1033	980	18100	2.90			
	1.53	966	917	18100	3.11			
	1.73	853	810	18100	3.52			
	1.91	772	733	18100	3.88			
	0.50	2968	2816	18100	1.01	LH97 R57		109
	0.60	2462	2336	18100	1.22	LV97 R57	63	116
	0.67	2207	2095	18100	1.36	LW97 R57		105
	0.95	1560	1480	16900	0.96			
	1.02	1448	1374	16900	1.04	LH87 R57		75
	1.13	1301	1234	16900	1.15	LV87 R57	63	79
	1.33	1111	1054	16900	1.35	LW87 R57		75
	1.53	965	916	16900	1.55			
	1.66	888	842	16900	1.69			
	0.85	1729	1641	16900	0.87			

1400 Input Rpm

Pm [kW]	na [1/min]	Ma [Nm]	i	FRa [N]	fs			m [kg]
0.18	1.03	1428	1355	16900	1.05	LH87 R57		77
(0.25HP)	1.26	1172	1112	16900	1.28	LV87 R57	63	80
	1.39	1060	1006	16900	1.41	LW87 R57		76
	1.70	870	826	16900	1.72			
	1.90	775	735	16900	1.94			
	1.72	858	814	8620	0.87	LH77 R37		39
	1.94	762	723	8620	0.98	LV77 R37	63	45
	2.32	636	603	8620	1.18	LW77 R37		41
	2.50	591	561	8620	1.27			
	1.67	883	838	8620	0.85	LH77 R37		40
	1.96	754	715	8620	0.99	LV77 R37	63	46
	2.31	639	607	8620	1.17	LW77 R37		42
	2.72	559	515	8620	1.34			
	3.01	505	465	8620	1.48	LH77 R37		38
	3.36	453	417	8620	1.66	LV77 R37	63	44
	3.81	399	367	8620	1.88	LW77 R37		40
	4.60	331	305	8620	2.27			
	5.12	297	273	8620	2.52			
	2.53	582	552	7560	1.03	LH67 R37		34
	2.88	513	487	7560	1.17	LV67 R37	63	35
						LW67 R37		33
	2.17	681	646	7560	0.88	LH67 R37		35
	2.55	578	548	7560	1.04	LV67 R37	63	36
	3.12	474	449	7560	1.27	LW67 R37		34
	3.77	391	371	7560	1.53			
	3.29	462	426	7560	1.30			
	3.67	415	382	7560	1.45	LH67 R37		33
	4.17	365	336	7560	1.64	LV67 R37	63	35
	4.73	322	296	7560	1.87	LW67 R37		33
	5.02	303	279	7560	1.98			
	2.88	513	487	7110	0.88			
	3.48	424	402	7110	1.06	LH57 R37		28
	2.82	523	496	7110	0.86	LV57 R37	63	31
	3.44	429	407	7110	1.05	LW57 R37		29
	3.81	387	368	7110	1.16			
	3.77	403	371	7110	1.12			
	4.24	359	330	7110	1.25			
	4.55	334	308	7110	1.35	LH57 R37		28
	5.07	300	276	7110	1.50	LV57 R37	63	30
	5.93	256	236	7110	1.75	LW57 R37		28
	6.52	233	215	7110	1.93			
	8.82	172	159	7110	2.61			
	4.26	357	329	5420	0.84			
	4.84	314	289	5420	0.95	LH47 R37		26
	5.83	261	240	5420	1.15	LV47 R37	63	26
	6.49	234	216	5420	1.28	LW47 R37		25
	7.60	200	184	5420	1.50			
	7.19	218	194.80	8620	3.44			
	8.23	190	170.05	8620	3.94	LH77		32
	9.10	172	153.87	8620	4.35	LV77	63	37
	9.95	158	140.70	8620	4.76	LW77		33
	11.26	139	124.34	8620	5.39			
	7.00	224	199.88	7560	2.68			
	8.28	189	169.10	7560	3.17			
	9.27	169	151.03	7560	3.55	LH67		26
	9.95	158	140.75	7560	3.81	LV67	63	24
	11.17	140	125.28	7560	4.28	LW67		22
	12.46	126	112.34	7560	4.77			

1400 Input Rpm

Pm [kW]	na [1/min]	Ma [Nm]	i	FRa [N]	fs			m [kg]
0.18	14.19	111	98.69	7560	5.43			
(0.25HP)	15.09	104	92.80	7560	5.77			
	7.65	205	182.99	7110	2.20			
	8.53	184	164.13	7110	2.45			
	9.90	158	141.40	7110	2.84			
	10.84	145	129.16	7110	3.11	LH57		20
	12.40	126	112.90	7110	3.56	LV57	63	23
	13.76	114	101.77	7110	3.95	LW57		21
	15.23	103	91.91	7110	4.37			
	16.98	92	82.45	7110	4.87			
	17.58	89	79.65	7110	5.04			
	19.29	81	72.56	7110	5.54			
	7.83	200	178.83	5420	1.50			
	8.73	180	160.40	5420	1.67			
	10.13	155	138.19	5420	1.94			
	11.09	141	126.22	5420	2.12			
	12.69	124	110.34	5420	2.43			
	14.08	111	99.46	5420	2.69			
	15.59	101	89.82	5420	2.98	LH47		19
	17.37	90	80.58	5420	3.32	LV47	63	17
	17.99	87	77.84	5420	3.44	LW47		17
	19.74	79	70.91	5420	3.78			
	22.09	71	63.37	5420	4.23			
	23.79	66	58.84	5420	4.55			
	26.50	59	52.84	5420	5.07			
	31.02	51	45.13	5420	5.93			
	10.12	155	138.36	4950	1.29			
	11.74	134	119.28	4950	1.50			
	13.93	113	100.51	4950	1.78			
	15.30	103	91.53	4950	1.95			
	17.55	89	79.77	4950	2.24			
	18.26	86	76.66	4950	2.33			
	20.05	78	69.81	4950	2.56	LH37		11
	23.01	68	60.84	4950	2.93	LV37	63	12
	25.91	61	54.03	4895	3.31	LW37		11
	26.80	59	52.24	4825	3.42			
	31.81	49	44.01	4590	4.06			
	34.93	45	40.08	4465	4.45			
	40.08	39	34.93	4285	5.11			
	45.13	35	31.02	4135	5.76			
	17.53	89	79.85	1770	0.95			
	20.38	77	68.70	1770	1.10			
	23.64	66	59.23	1770	1.28			
	28.05	56	49.90	1770	1.52			
	30.80	51	45.45	1770	1.67	MH17	63	8
	35.35	44	39.61	1770	1.92	MV17		8
	39.81	39	35.17	1770	2.16			
	47.69	33	29.36	1770	2.59			
	56.53	28	24.76	1770	3.06			
	71.10	22	19.69	1770	3.85			
	93.22	17	15.02	1770	4.12	MH17		8
	110.64	15	12.65	1770	4.57	MV17	63	7
	139.40	12	10.04	1750	5.26			
	223.29	7	6.27	3020	5.76			
	255.94	7	5.47	2890	6.67	XH67	63	12
	282.83	6	4.95	2770	6.67			
	309.05	5	4.53	2710	6.67			
	255.94	7	5.47	2500	5.67			

1400 Input Rpm

Pm [kW]	na [1/min]	Ma [Nm]	i	FRa [N]	fs			m [kg]
0.18	286.89	6	4.88	2420	6.56			
(0.25HP)	307.69	5	4.55	2340	6.67			
	345.68	5	4.05	2280	6.67			
	385.67	4	3.63	2180	15.06	XH57	63	10
	438.87	4	3.19	2090	16.78			
	466.67	4	3.00	2050	17.28			
	627.80	3	2.23	1865	19.89			
0.25	0.14	13901	9791	62700	0.94			
(0.34HP)	0.17	11947	8415	62700	1.09			
	0.19	10314	7264	62700	1.26			
	0.22	8936	6294	62700	1.45	MH147 R77		404
	0.26	7517	5294	62700	1.73	MV147 R77	71	396
	0.30	6622	4664	62700	1.96	MW147 R77		380
	0.35	5733	4038	62700	2.27			
	0.40	4950	3486	62700	2.63			
	0.49	4079	2873	62700	3.19			
	0.24	8149	5739	37500	0.86	MH137 R77		264
	0.28	7179	5056	37500	0.98	MV137 R77	71	275
	0.33	6016	4237	37500	1.16	MW137 R77		259
	0.35	5669	3993	37500	1.23			
	0.31	6686	4568	37500	1.05			
	0.35	5837	3988	37500	1.20	MH137 R77		252
	0.39	5281	3608	37500	1.33	MV137 R77	71	264
	0.42	4829	3299	37500	1.45	MW137 R77		248
	0.48	4268	2916	37500	1.64			
	0.51	4000	2733	37500	1.75			
	0.56	3678	2513	37500	1.90			
	0.60	3400	2323	37500	2.06	MH137 R77		261
	0.66	3103	2120	37500	2.26	MV137 R77	71	273
	0.78	2637	1802	37500	2.65	MW137 R77		257
	0.90	2267	1549	37500	3.09			
	1.01	2034	1389	37500	3.44			
	1.09	1873	1279	37500	3.74			
	0.47	4204	2961	29500	1.02	MH107 R77		182
						MV107 R77	71	185
						MW107 R77		174
	0.46	4482	3062	29500	0.96	MH107 R77		171
						MV107 R77	71	175
						MW107 R77		164
	0.75	2726	1862	29500	1.58			
	0.92	2237	1528	29500	1.92			
	1.03	1992	1361	29500	2.16	MH107 R77		180
	1.15	1787	1221	29500	2.41	MV107 R77	71	183
	1.25	1645	1124	29500	2.61	MW107 R77		172
	1.48	1388	949	29500	3.10			
	1.76	1166	796	29500	3.69			
	0.80	2562	1750	18100	1.17	LH97 R57		108
	0.83	2475	1691	18100	1.21	LV97 R57	71	112
						LW97 R57		101
	0.76	2690	1838	18100	1.12			
	0.81	2533	1730	18100	1.18			
	0.90	2272	1553	18100	1.32			
	1.00	2052	1402	18100	1.46	LH97 R57		109
	1.09	1880	1285	18100	1.60	LV97 R57	71	116
	1.28	1596	1091	18100	1.88	LW97 R57		105
	1.47	1394	952	18100	2.15			
	1.68	1223	835	18100	2.45			
	1.82	1124	768	18100	2.67			

1400 Input Rpm

Pm [kW]	na [1/min]	Ma [Nm]	i	FRa [N]	fs			m [kg]
0.25	2.08	986	674	18100	3.04			
(0.34HP)	1.13	1806	1234	16900	0.83	LH87 R57		75
	1.33	1543	1054	16900	0.97	LV87 R57	71	79
	1.53	1341	916	16900	1.12	LW87 R57		75
	1.66	1233	842	16900	1.22			
	1.26	1628	1112	16900	0.92			
	1.70	1208	826	16900	1.24			
	1.90	1076	735	16900	1.39	LH87 R57		77
	2.22	925	632	16900	1.62	LV87 R57	71	80
	2.37	864	590	16900	1.74	LW87 R57		76
	2.68	764	522	16900	1.96			
	3.18	644	440	16900	2.33			
	5.32	385	263	16900	3.89			
	2.50	821	561	8620	0.91	LH77 R37		39
						LV77 R37	71	45
						LW77 R37		41
	2.62	782	534	8620	0.96			
	2.81	728	497	8620	1.03	LH77 R37		40
	3.20	641	438	8620	1.17	LV77 R37	71	46
	3.77	543	371	8620	1.38	LW77 R37		42
	4.45	461	315	8620	1.63			
	2.72	777	515	8620	0.97			
	3.01	702	465	8620	1.07			
	3.36	629	417	8620	1.19	LH77 R37		38
	3.81	554	367	8620	1.35	LV77 R37	71	44
	4.60	460	305	8620	1.63	LW77 R37		40
	5.12	413	273	8620	1.82			
	5.99	353	234	8620	2.13			
	3.77	543	371	7560	1.10	LH67 R37		35
						LV67 R37	71	36
						LW67 R37		34
	3.29	642	426	7560	0.93			
	3.67	576	382	7560	1.04			
	4.17	507	336	7560	1.18			
	4.73	447	296	7560	1.34	LH67 R37		33
	5.02	421	279	7560	1.43	LV67 R37	71	35
	5.59	378	250	7560	1.59	LW67 R37		33
	6.35	333	221	7560	1.80			
	6.55	323	214	7560	1.86			
	7.72	274	181	7560	2.19			
	8.77	241	160	7560	2.49			
	4.24	498	330	7110	0.90			
	4.55	464	308	7110	0.97			
	5.07	417	276	7110	1.08	LH57 R37		28
	5.93	356	236	7110	1.26	LV57 R37	71	30
	6.52	324	215	7110	1.39	LW57 R37		28
	8.82	239	159	7110	1.88			
	9.63	219	145	7110	2.05			
	5.83	362	240	5420	0.83	LH47 R37		26
	6.49	325	216	5420	0.92	LV47 R37	71	26
	7.60	278	184	5420	1.08	LW47 R37		25
	8.97	236	156	5420	1.27			
	7.19	303	194.80	8620	2.47			
	8.23	265	170.05	8620	2.84			
	9.10	239	153.87	8620	3.13			
	9.95	219	140.70	8620	3.43	LH77		32
	11.26	193	124.34	8620	3.88	LV77	71	37
	12.78	170	109.54	8620	4.40	LW77		33

1400 Input Rpm

Pm [kW]	na [1/min]	Ma [Nm]	i	FRa [N]	fs			m [kg]
0.25	15.59	140	89.80	8620	4.80			
(0.34HP)	16.54	132	84.62	8620	4.80			
	7.00	311	199.88	7560	1.93			
	8.28	263	169.10	7560	2.28			
	9.27	235	151.03	7560	2.55			
	9.95	219	140.75	7560	2.74	LH67		26
	11.17	195	125.28	7560	3.08	LV67	71	24
	12.46	175	112.34	7560	3.43	LW67		22
	14.19	154	98.69	7560	3.91			
	15.09	144	92.80	7560	4.16			
	17.81	122	78.59	7560	4.80			
	20.32	107	68.90	7560	4.80			
	7.65	285	182.99	7110	1.58			
	8.53	255	164.13	7110	1.76			
	9.90	220	141.40	7110	2.05			
	10.84	201	129.16	7110	2.24			
	12.40	176	112.90	7110	2.56			
	13.76	158	101.77	7110	2.84	LH57		20
	15.23	143	91.91	7110	3.15	LV57	71	23
	16.98	128	82.45	7110	3.51	LW57		21
	17.58	124	79.65	7110	3.63			
	19.29	113	72.56	7110	3.99			
	21.59	101	64.84	7110	4.46			
	23.25	94	60.21	7110	4.80			
	25.89	84	54.07	7110	4.80			
	7.83	278	178.83	5420	1.08			
	8.73	250	160.40	5420	1.20			
	10.13	215	138.19	5420	1.40			
	11.09	196	126.22	5420	1.53			
	12.69	172	110.34	5420	1.75			
	14.08	155	99.46	5420	1.94			
	15.59	140	89.82	5420	2.15	LH47		19
	17.37	125	80.58	5420	2.39	LV47	71	17
	17.99	121	77.84	5420	2.48	LW47		17
	19.74	110	70.91	5420	2.72			
	22.09	99	63.37	5420	3.04			
	23.79	92	58.84	5420	3.28			
	26.50	82	52.84	5420	3.65			
	31.02	70	45.13	5420	4.27			
	33.73	65	41.51	5420	4.65			
	37.56	58	37.28	5420	4.80			
	10.12	215	138.36	4950	0.93			
	11.74	186	119.28	4950	1.08			
	13.93	156	100.51	4950	1.28			
	15.30	142	91.53	4950	1.40			
	17.55	124	79.77	4950	1.61			
	18.26	119	76.66	4950	1.68			
	20.05	109	69.81	4950	1.84	LH37		11
	23.01	95	60.84	4935	2.11	LV37	71	12
	25.91	84	54.03	4780	2.38	LW37		11
	26.80	81	52.24	4705	2.46			
	31.81	68	44.01	4485	2.92			
	34.93	62	40.08	4370	3.21			
	40.08	54	34.93	4205	3.68			
	45.13	48	31.02	4060	4.14			
	54.07	40	25.89	3855	4.80			
	57.14	39	24.50	3800	5.01	LH37		11
	63.39	35	22.09	3680	5.44	LV37	71	11

1400 Input Rpm

Pm [kW]	na [1/min]	Ma [Nm]	i	FRa [N]	fs			m [kg]
0.25	70.19	32	19.95	3570	5.92	LW37		10
(0.34HP)	20.38	107	68.70	1770	0.80			
	23.64	92	59.23	1770	0.92			
	28.05	78	49.90	1770	1.09			
	30.80	71	45.45	1770	1.20	MH17		8
	35.35	62	39.61	1770	1.38	MV17	71	8
	39.81	55	35.17	1770	1.55			
	47.69	46	29.36	1770	1.86			
	56.53	39	24.76	1770	2.21			
	71.10	31	19.69	1770	2.77			
	93.22	24	15.02	1770	2.97			
	110.64	20	12.65	1770	3.29	MH17		8
	139.40	16	10.04	1690	3.79	MV17	71	7
	188.09	12	7.44	1570	4.56			
	280.41	8	4.99	1400	5.82			
	223.29	10	6.27	3000	4.15			
	255.94	9	5.47	2870	4.80			
	282.83	8	4.95	2750	4.80	XH67	71	12
	309.05	7	4.53	2690	4.80			
	397.73	6	3.52	2470	14.95			
	514.71	4	2.72	2280	19.77			
	255.94	9	5.47	2480	4.08			
	286.89	8	4.88	2400	4.72			
	307.69	8	4.55	2320	4.80			
	345.68	7	4.05	2260	4.80			
	385.67	6	3.63	2160	10.84	XH57	71	10
	438.87	5	3.19	2075	12.08			
	466.67	5	3.00	2035	12.44			
	627.80	4	2.23	1850	14.32			
	880.50	3	1.59	1660	16.20			
	1068.70	2	1.31	1565	19.32			
0.37	0.19	15264	7264	62700	0.85			
(0.5HP)	0.22	13225	6294	62700	0.98			
	0.26	11125	5294	62700	1.17	MH147 R77		404
	0.30	9801	4664	62700	1.33	MV147 R77	71	396
	0.35	8486	4038	62700	1.53	MW147 R77		380
	0.40	7325	3486	62700	1.77			
	0.49	6037	2873	62700	2.15			
	0.35	8390	3993	37500	0.83	MH137 R77		264
						MV137 R77	71	275
						MW137 R77		259
	0.35	8639	3988	37500	0.81			
	0.39	7816	3608	37500	0.90	MH137 R77		252
	0.42	7147	3299	37500	0.98	MV137 R77	71	264
	0.48	6316	2916	37500	1.11	MW137 R77		248
	0.55	5564	2569	37500	1.26			
	0.66	4562	2106	37500	1.53			
	0.51	5921	2733	37500	1.18			
	0.56	5443	2513	37500	1.29			
	0.60	5032	2323	37500	1.39			
	0.66	4592	2120	37500	1.52	MH137 R77		261
	0.78	3903	1802	37500	1.79	MV137 R77	71	273
	0.90	3356	1549	37500	2.09	MW137 R77		257
	1.01	3010	1389	37500	2.33			
	1.09	2771	1279	37500	2.53			
	1.30	2339	1080	37500	2.99			
	1.53	1988	918	37500	3.52			
	0.72	4234	1955	29500	1.02			

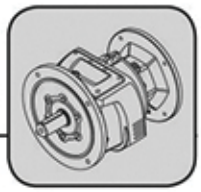

1400 Input Rpm

Pm [kW]	na [1/min]	Ma [Nm]	i	FRa [N]	fs			m [kg]
0.37	0.76	3990	1842	29500	1.08			
(0.5HP)	0.78	3872	1788	29500	1.11	MH107 R77		171
	0.88	3444	1590	29500	1.25	MV107 R77	71	175
	1.11	2722	1256	29500	1.58	MW107 R77		164
	1.21	2510	1159	29500	1.71			
	1.37	2211	1021	29500	1.94			
	0.75	4035	1862	29500	1.07			
	0.92	3310	1528	29500	1.30			
	1.03	2948	1361	29500	1.46	MH107 R77		180
	1.15	2645	1221	29500	1.63	MV107 R77	71	183
	1.25	2435	1124	29500	1.77	MW107 R77		172
	1.48	2055	949	29500	2.09			
	1.76	1725	796	29500	2.49			
	1.10	2769	1278	18100	1.08	LH97 R57		108
	1.27	2382	1099	18100	1.26	LV97 R57	71	112
						LW97 R57		101
	1.00	3037	1402	18100	0.99			
	1.09	2783	1285	18100	1.08			
	1.28	2362	1091	18100	1.27			
	1.47	2063	952	18100	1.45			
	1.68	1810	835	18100	1.66	LH97 R57		109
	1.82	1664	768	18100	1.80	LV97 R57	71	116
	2.08	1460	674	18100	2.05	LW97 R57		105
	2.38	1275	588	18100	2.35			
	2.80	1082	500	18100	2.77			
	3.21	945	436	18100	3.18			
	3.65	831	384	18100	3.61			
	4.18	726	335	18100	4.13			
	1.66	1825	842	16900	0.82	LH87 R57		75
	1.85	1639	756	16900	0.92	LV87 R57	71	79
	2.18	1389	641	16900	1.08	LW87 R57		75
	1.90	1593	735	16900	0.94			
	2.22	1369	632	16900	1.10			
	2.37	1279	590	16900	1.17	LH87 R57		77
	2.68	1131	522	16900	1.33	LV87 R57	71	80
	3.18	952	440	16900	1.57	LW87 R57		76
	5.32	570	263	16900	2.63			
	6.05	501	231	16900	2.99			
	2.60	1201	538	16900	1.25	LH87 R57		74
	2.93	1069	479	16900	1.40	LV87 R57	71	78
	3.39	921	412	16900	1.63	LW87 R57		74
	3.89	804	360	16900	1.87			
	3.77	804	371	8620	0.93	LH77 R37		40
	4.45	682	315	8620	1.10	LV77 R37	71	46
						LW77 R37		42
	3.36	931	417	8620	0.81			
	3.81	820	367	8620	0.91	LH77 R37		38
	4.60	680	305	8620	1.10	LV77 R37	71	44
	5.12	611	273	8620	1.23	LW77 R37		40
	5.99	522	234	8620	1.44			
	7.07	442	198	8620	1.70			
	4.73	661	296	7560	0.91			
	5.02	623	279	7560	0.96	LH67 R37		33
	5.59	559	250	7560	1.07	LV67 R37	71	35
	6.35	492	221	7560	1.22	LW67 R37		33
	6.55	477	214	7560	1.26			
	7.19	448	194.80	8620	1.67			
	8.23	392	170.05	8620	1.92			

1400 Input Rpm

Pm [kW]	na [1/min]	Ma [Nm]	i	FRa [N]	fs			m [kg]
0.37	9.10	354	153.87	8620	2.12			
(0.5HP)	9.95	324	140.70	8620	2.32			
	11.26	286	124.34	8620	2.62	LH77		32
	12.78	252	109.54	8620	2.97	LV77	71	37
	15.59	207	89.80	8620	3.24	LW77		33
	16.54	195	84.62	8620	3.24			
	19.17	168	73.05	8620	4.46			
	24.25	133	57.73	8620	5.64			
	7.00	460	199.88	7560	1.30			
	8.28	389	169.10	7560	1.54			
	9.27	348	151.03	7560	1.73			
	9.95	324	140.75	7560	1.85			
	11.17	288	125.28	7560	2.08			
	12.46	259	112.34	7560	2.32			
	14.19	227	98.69	7560	2.64	LH67		26
	15.09	214	92.80	7560	2.81	LV67	71	24
	17.81	181	78.59	7560	3.24	LW67		22
	20.32	159	68.90	7560	3.24			
	22.20	145	63.07	7560	3.24			
	24.04	134	58.23	7560	3.24			
	26.81	120	52.21	7560	3.24			
	30.52	106	45.87	7560	5.68			
	33.97	95	41.22	7310	5.28			
	36.12	89	38.75	7175	5.50			
	7.65	421	182.99	7110	1.07			
	8.53	378	164.13	7110	1.19			
	9.90	326	141.40	7110	1.38			
	10.84	297	129.16	7110	1.51			
	12.40	260	112.90	7110	1.73			
	13.76	234	101.77	7110	1.92			
	15.23	212	91.91	7110	2.13			
	16.98	190	82.45	7110	2.37			
	17.58	183	79.65	7110	2.45	LH57		20
	19.29	167	72.56	7110	2.69	LV57	71	23
	21.59	149	64.84	7110	3.01	LW57		21
	23.25	139	60.21	7110	3.24			
	25.89	124	54.07	7090	3.24			
	30.32	106	46.18	6775	3.24			
	32.96	98	42.48	6610	3.24			
	36.70	88	38.14	6405	3.24			
	43.31	74	32.33	6035	4.88			
	50.70	64	27.61	5760	5.42			
	55.12	58	25.40	5615	5.73			
	8.73	369	160.40	5420	0.81			
	10.13	318	138.19	5420	0.94			
	11.09	291	126.22	5420	1.03			
	12.69	254	110.34	5420	1.18			
	14.08	229	99.46	5420	1.31			
	15.59	207	89.82	5420	1.45			
	17.37	186	80.58	5420	1.62			
	17.99	179	77.84	5420	1.67			
	19.74	163	70.91	5420	1.84	LH47		19
	22.09	146	63.37	5420	2.06	LV47	71	17
	23.79	135	58.84	5420	2.21	LW47		17
	26.50	122	52.84	5420	2.47			
	31.02	104	45.13	5420	2.89			
	33.73	96	41.51	5420	3.14			
	37.56	86	37.28	5420	3.24			

1400 Input Rpm

Pm [kW]	na [1/min]	Ma [Nm]	i	FRa [N]	fs			m [kg]
0.37	43.98	73	31.83	5420	4.09			
(0.5HP)	51.49	63	27.19	5420	4.79			
	55.98	58	25.01	5420	5.21			
	62.34	52	22.46	5410	5.80			
	56.68	59	24.70	5420	5.12	LH47		18
	60.82	55	23.02	5420	5.49	LV47	71	17
						LW47		16
	13.93	231	100.51	4950	0.86			
	15.30	211	91.53	4950	0.95			
	17.55	184	79.77	4950	1.09			
	18.26	176	76.66	4950	1.13			
	20.05	161	69.81	4860	1.24			
	23.01	140	60.84	4705	1.43	LH37		11
	25.91	124	54.03	4575	1.61	LV37	71	12
	26.80	120	52.24	4490	1.66	LW37		11
	31.81	101	44.01	4310	1.97			
	34.93	92	40.08	4210	2.17			
	40.08	80	34.93	4060	2.49			
	45.13	71	31.02	3935	2.80			
	54.07	60	25.89	3750	3.24			
	57.14	58	24.50	3705	3.24			
	63.39	52	22.09	3595	3.24	LH37		11
	70.19	47	19.95	3495	3.24	LV37	71	11
	78.24	42	17.89	3385	3.24	LW37		10
	88.90	37	15.75	3260	5.06			
	107.14	31	13.07	3085	5.83			
	30.80	105	45.45	1770	0.81			
	35.35	91	39.61	1770	0.93			
	39.81	81	35.17	1770	1.05	MH17	71	8
	47.69	68	29.36	1770	1.26	MV17		8
	56.53	57	24.76	1770	1.49			
	71.10	45	19.69	1770	1.87			
	93.22	36	15.02	1720	2.00			
	110.64	30	12.65	1670	2.22			
	139.40	24	10.04	1600	2.56	MH17	71	8
	188.09	18	7.44	1490	3.08	MV17		7
	280.41	12	4.99	1350	3.93			
	345.74	10	4.05	1280	4.46			
	255.94	13	5.47	2850	3.24			
	282.83	12	4.95	2710	3.24			
	309.05	11	4.53	2670	3.24			
	397.73	9	3.52	2440	10.10			
	484.43	7	2.89	2310	13.59	XH67	71	12
	514.71	7	2.72	2260	13.36			
	595.74	6	2.35	2155	14.23			
	752.69	5	1.86	2005	16.26			
	864.20	4	1.62	1915	16.63			
	255.94	13	5.47	2440	2.76			
	286.89	12	4.88	2370	3.19			
	307.69	11	4.55	2280	3.24			
	345.68	10	4.05	2240	3.24			
	385.67	9	3.63	2125	7.32	XH57	71	10
	438.87	8	3.19	2045	8.16			
	466.67	7	3.00	2005	8.41			
	627.80	5	2.23	1830	9.68			
	880.50	4	1.59	1645	10.95			
	1068.70	3	1.31	1555	13.05			
0.55	0.30	14569	4664	62700	0.89	MH147 R77		406

1400 Input Rpm

Pm [kW]	na [1/min]	Ma [Nm]	i	FRa [N]	fs			m [kg]
0.55	0.35	12614	4038	62700	1.03	MV147 R77	80	398
(0.74HP)	0.40	10889	3486	62700	1.19	MW147 R77		382
	0.49	8974	2873	62700	1.45			
	0.55	8184	2541	62700	1.59			
	0.60	7464	2318	62700	1.74			
	0.71	6347	1971	62700	2.05	MH147 R77		404
	0.78	5789	1798	62700	2.25	MV147 R77	80	395
	0.87	5208	1617	62700	2.50	MW147 R77		380
	0.97	4638	1440	62700	2.80			
	1.08	4161	1292	62700	3.12			
	1.18	3831	1190	62700	3.39			
	0.55	8271	2569	37500	0.85	MH137 R77		254
						MV137 R77	80	265
						MW137 R77		250
	0.51	8801	2733	37500	0.80			
	0.56	8092	2513	37500	0.87			
	0.60	7481	2323	37500	0.94			
	0.66	6826	2120	37500	1.03			
	0.78	5802	1802	37500	1.21	MH137 R77		263
	0.90	4988	1549	37500	1.40	MV137 R77	80	275
	1.01	4474	1389	37500	1.56	MW137 R77		259
	1.09	4120	1279	37500	1.70			
	1.30	3476	1080	37500	2.01			
	1.53	2955	918	37500	2.37			
	1.68	2685	834	37500	2.61			
	1.11	4046	1256	29500	1.06			
	1.21	3732	1159	29500	1.15	MH107 R77		173
	1.37	3287	1021	29500	1.31	MV107 R77	80	176
	1.64	2755	856	29500	1.56	MW107 R77		166
	1.74	2596	806	29500	1.66			
	2.01	2241	696	29500	1.92			
	0.92	4921	1528	29500	0.87			
	1.03	4383	1361	29500	0.98	MH107 R77		181
	1.15	3931	1221	29500	1.09	MV107 R77	80	185
	1.25	3620	1124	29500	1.19	MW107 R77		174
	1.48	3054	949	29500	1.41			
	1.76	2564	796	29500	1.68			
	1.73	2608	810	18100	1.15	LH97 R57		110
	1.91	2360	733	18100	1.27	LV97 R57	80	114
						LW97 R57		103
	1.28	3512	1091	18100	0.85			
	1.47	3066	952	18100	0.98			
	1.68	2690	835	18100	1.12			
	1.82	2474	768	18100	1.21			
	2.08	2170	674	18100	1.38	LH97 R57		111
	2.38	1895	588	18100	1.58	LV97 R57	80	118
	2.80	1609	500	18100	1.87	LW97 R57		107
	3.21	1404	436	18100	2.14			
	3.65	1235	384	18100	2.43			
	4.18	1079	335	18100	2.78			
	4.77	945	293	18100	3.18			
	5.80	777	241	18100	3.86			
	2.68	1681	522	16900	0.89			
	2.84	1590	494	16900	0.94	LH87 R57		79
	3.18	1416	440	16900	1.06	LV87 R57	80	82
	3.71	1217	378	16900	1.23	LW87 R57		78
	4.49	1005	312	16900	1.49			
	2.93	1589	479	16900	0.94	LH87 R57		76

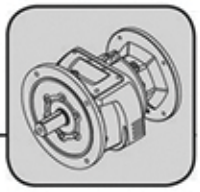

1400 Input Rpm

Pm [kW]	na [1/min]	Ma [Nm]	i	FRa [N]	fs			m [kg]
0.55	3.39	1369	412	16900	1.10	LV87 R57	80	80
(0.74HP)	3.89	1196	360	16900	1.25	LW87 R57		76
	5.12	908	273	8620	0.83	LH77 R37		40
	5.99	776	234	8620	0.97	LV77 R37	80	46
	7.07	657	198	8620	1.14	LW77 R37		42
	6.95	689	201.38	16900	2.18			
	7.79	615	179.70	16900	2.18			
	8.69	551	161.11	16900	2.18	LH87		63
	10.19	470	137.42	16900	2.18	LV87	80	67
	11.46	418	122.17	16900	3.71	LW87		61
	12.44	385	112.52	16900	4.03			
	16.04	299	87.27	16900	5.19			
	7.19	667	194.80	8620	1.12			
	8.23	582	170.05	8620	1.29			
	9.10	527	153.87	8620	1.42			
	9.95	482	140.70	8620	1.56			
	11.26	426	124.34	8620	1.76			
	12.78	375	109.54	8620	2.00			
	15.59	307	89.80	8620	2.18	LH77		34
	16.54	290	84.62	8620	2.18	LV77	80	39
	19.17	250	73.05	8620	3.00	LW77		35
	24.25	198	57.73	8620	3.80			
	26.30	182	53.24	8620	4.12			
	29.85	161	46.90	8490	4.67			
	35.62	135	39.31	7995	4.96			
	37.80	127	37.04	7855	5.16			
	43.78	109	31.97	7520	5.69			
	7.00	684	199.88	7560	0.88			
	8.28	579	169.10	7560	1.04			
	9.27	517	151.03	7560	1.16			
	9.95	482	140.75	7560	1.25			
	11.17	429	125.28	7560	1.40			
	12.46	384	112.34	7560	1.56			
	14.19	338	98.69	7560	1.78			
	15.09	318	92.80	7560	1.89	LH67		28
	17.81	269	78.59	7560	2.18	LV67	80	25
	20.32	236	68.90	7560	2.18	LW67		23
	22.20	216	63.07	7560	2.18			
	24.04	199	58.23	7560	2.18			
	26.81	179	52.21	7560	2.18			
	30.52	157	45.87	7425	3.82			
	33.97	141	41.22	7110	3.55			
	36.12	133	38.75	6990	3.70			
	43.72	110	32.02	6695	5.08			
	48.66	98	28.77	6420	4.51			
	57.99	85	24.14	6145	5.95	LH67		27
						LV67	80	24
						LW67		23
	8.53	562	164.13	7110	0.80			
	9.90	484	141.40	7110	0.93			
	10.84	442	129.16	7110	1.02			
	12.40	386	112.90	7110	1.16			
	13.76	348	101.77	7110	1.29			
	15.23	315	91.91	7110	1.43			
	16.98	282	82.45	7110	1.59			
	17.58	273	79.65	7110	1.65			
	19.29	248	72.56	7110	1.81	LH57		22
	21.59	222	64.84	7110	2.03	LV57	80	24

1400 Input Rpm

Pm [kW]	na [1/min]	Ma [Nm]	i	FRa [N]	fs			m [kg]
0.55	23.25	206	60.21	7040	2.18	LW57		23
(0.74HP)	25.89	185	54.07	6845	2.18			
	30.32	158	46.18	6565	2.18			
	32.96	145	42.48	6420	2.18			
	36.70	131	38.14	6230	2.18			
	43.31	111	32.33	5860	3.28			
	50.70	95	27.61	5610	3.65			
	55.12	87	25.40	5480	3.86			
	61.38	78	22.81	5315	4.14			
	55.39	89	25.27	5530	4.29			
	59.44	83	23.55	5420	4.49	LH57		21
	66.78	74	20.96	5235	4.86	LV57	80	21
	74.47	66	18.80	5070	5.22	LW57		20
	90.15	55	15.53	4785	5.93			
	12.69	378	110.34	5420	0.79			
	14.08	340	99.46	5420	0.88			
	15.59	307	89.82	5420	0.98			
	17.37	276	80.58	5420	1.09			
	17.99	266	77.84	5420	1.13			
	19.74	243	70.91	5420	1.24			
	22.09	217	63.37	5420	1.38	LH47		20
	23.79	201	58.84	5420	1.49	LV47	80	19
	26.50	181	52.84	5420	1.66	LW47		18
	31.02	154	45.13	5420	1.94			
	33.73	142	41.51	5420	2.11			
	37.56	128	37.28	5420	2.18			
	43.98	109	31.83	5420	2.75			
	51.49	93	27.19	5420	3.22			
	55.98	86	25.01	5420	3.51			
	62.34	77	22.46	5290	3.90			
	56.68	87	24.70	5420	3.44			
	60.82	81	23.02	5375	3.69	LH47		19
	68.33	72	20.49	5195	4.15	LV47	80	18
	76.20	65	18.37	5030	4.63	LW47		17
	92.25	54	15.18	4750	5.60			
	20.05	239	69.81	4465	0.84			
	23.01	208	60.84	4365	0.96			
	25.91	185	54.03	4270	1.08			
	26.80	179	52.24	4175	1.12	LH37		14
	31.81	151	44.01	4040	1.33	LV37	80	13
	34.93	137	40.08	3965	1.46	LW37		12
	40.08	120	34.93	3850	1.67			
	45.13	106	31.02	3750	1.88			
	54.07	89	25.89	3590	2.18			
	57.14	86	24.50	3560	2.18			
	63.39	78	22.09	3470	2.18			
	70.19	70	19.95	3380	2.18			
	78.24	63	17.89	3280	2.18	LH37		13
	88.90	56	15.75	3170	3.40	LV37	80	13
	107.14	46	13.07	3010	3.93	LW37		12
	119.32	41	11.73	2920	4.22			
	139.69	35	10.02	2790	4.68			
	164.77	30	8.50	2655	5.23			
	207.81	24	6.74	2470	5.60			
	47.69	100	29.36	1430	0.85	MH17		9
	56.53	85	24.76	1480	1.00	MV17	80	8
	71.10	67	19.69	1510	1.26			
	93.22	53	15.02	1500	1.35			

1400 Input Rpm

Pm [kW]	na [1/min]	Ma [Nm]	i	FRa [N]	fs			m [kg]
0.55	110.64	45	12.65	1490	1.50			
(0.74HP)	139.40	35	10.04	1450	1.72	MH17		9
	188.09	26	7.44	1390	2.07	MV17	80	8
	280.41	18	4.99	1280	2.64			
	345.74	14	4.05	1220	3.00			
	255.94	20	5.47	2810	2.18			
	282.83	18	4.95	2660	2.18			
	309.05	16	4.53	2630	2.18			
	397.73	13	3.52	2400	6.79			
	484.43	11	2.89	2280	9.14	XH67	80	14
	514.71	10	2.72	2230	8.99			
	595.74	9	2.35	2130	9.58			
	752.69	7	1.86	1985	10.94			
	864.20	6	1.62	1895	11.19			
	307.69	17	4.55	2210	2.18			
	345.68	15	4.05	2200	2.18			
	385.67	13	3.63	2075	4.93			
	438.87	12	3.19	2000	5.49	XH57	80	12
	466.67	11	3.00	1965	5.65			
	627.80	8	2.23	1795	6.51			
	880.50	6	1.59	1620	7.36			
	1068.70	5	1.31	1540	8.78			
0.75	0.55	11159	2541	62700	1.16			
(1HP)	0.60	10178	2318	62700	1.28			
	0.71	8655	1971	62700	1.50	MH147 R77		404
	0.78	7894	1798	62700	1.65	MV147 R77	80	395
	0.87	7101	1617	62700	1.83	MW147 R77		380
	0.97	6325	1440	62700	2.06			
	1.08	5673	1292	62700	2.29			
	1.18	5224	1190	62700	2.49			
	0.77	8011	1824	37500	0.87			
	0.82	7522	1713	37500	0.93	MH137 R77		254
	0.89	6916	1575	37500	1.01	MV137 R77	80	265
	1.03	5944	1354	37500	1.18	MW137 R77		250
	1.12	5482	1249	37500	1.28			
	0.78	7912	1802	37500	0.88			
	0.90	6802	1549	37500	1.03			
	1.01	6101	1389	37500	1.15	MH137 R77		263
	1.09	5618	1279	37500	1.25	MV137 R77	80	275
	1.30	4740	1080	37500	1.48	MW137 R77		259
	1.53	4029	918	37500	1.74			
	1.68	3661	834	37500	1.91			
	1.92	3196	728	37500	2.19			
	1.37	4483	1021	29500	0.96	MH107 R77		173
	1.64	3757	856	29500	1.14	MV107 R77	80	176
	1.74	3540	806	29500	1.21	MW107 R77		166
	1.48	4165	949	29500	1.03			
	1.76	3497	796	29500	1.23	MH107 R77		181
	2.35	2616	596	29500	1.64	MV107 R77	80	185
	2.85	2161	492	29500	1.99	MW107 R77		174
	3.37	1823	415	29500	2.36			
	4.02	1531	349	29500	2.81			
	2.08	2959	674	18100	1.01			
	2.38	2584	588	18100	1.16			
	2.80	2194	500	18100	1.37	LH97 R57		111
	3.21	1915	436	18100	1.57	LV97 R57	80	118
	3.65	1685	384	18100	1.78	LW97 R57		107
	4.18	1471	335	18100	2.04			

1400 Input Rpm

Pm [kW]	na [1/min]	Ma [Nm]	i	FRa [N]	fs			m [kg]
0.75	4.77	1288	293	18100	2.33			
(1HP)	5.80	1060	241	18100	2.83			
	3.71	1659	378	16900	0.90	LH87 R57		79
	4.49	1370	312	16900	1.09	LV87 R57	80	82
	5.32	1156	263	16900	1.30	LW87 R57		78
	6.05	1016	231	16900	1.48			
	3.89	1630	360	16900	0.92	LH87 R57		76
	4.55	1394	308	16900	1.08	LV87 R57	80	80
	5.32	1191	263	16900	1.26	LW87 R57		78
	6.95	940	201.38	16900	1.60			
	7.79	839	179.70	16900	1.60			
	8.69	752	161.11	16900	1.60			
	10.19	641	137.42	16900	1.60			
	11.46	570	122.17	16900	2.72			
	12.44	525	112.52	16900	2.95	LH87		63
	16.04	407	87.27	16900	3.81	LV87	80	67
	19.55	334	71.60	16900	4.45	LW87		61
	21.95	298	63.77	16900	4.80			
	22.75	287	61.54	16900	4.92			
	25.54	256	54.81	16900	5.31			
	28.48	229	49.16	16900	5.71			
	7.19	909	194.80	8620	0.82			
	8.23	794	170.05	8620	0.95			
	9.10	718	153.87	8620	1.04			
	9.95	657	140.70	8620	1.14			
	11.26	580	124.34	8620	1.29			
	12.78	511	109.54	8620	1.47			
	15.59	419	89.80	8620	1.60	LH77		34
	16.54	395	84.62	8620	1.60	LV77	80	39
	19.17	341	73.05	8620	2.20	LW77		35
	24.25	269	57.73	8620	2.78			
	26.30	248	53.24	8605	3.02			
	29.85	219	46.90	8310	3.43			
	35.62	183	39.31	7820	3.64			
	37.80	173	37.04	7690	3.78			
	43.78	149	31.97	7375	4.17			
	55.40	118	25.27	6890	4.88			
	60.06	112	23.31	6770	5.89	LH77		32
						LV77	80	38
						LW77		34
	9.27	705	151.03	7560	0.85			
	9.95	657	140.75	7560	0.91			
	11.17	585	125.28	7560	1.03			
	12.46	524	112.34	7560	1.14			
	14.19	461	98.69	7560	1.30			
	15.09	433	92.80	7560	1.39			
	17.81	367	78.59	7560	1.60			
	20.32	322	68.90	7560	1.60	LH67		28
	22.20	294	63.07	7560	1.60	LV67	80	25
	24.04	272	58.23	7560	1.60	LW67		23
	26.81	244	52.21	7465	1.60			
	30.52	214	45.87	7220	2.80			
	33.97	192	41.22	6890	2.60			
	36.12	181	38.75	6785	2.71			
	43.72	149	32.02	6550	3.72			
	48.66	134	28.77	6270	3.31			
	61.14	107	22.90	5955	4.66			
	57.99	116	24.14	6035	4.36	LH67		

1400 Input Rpm

Pm [kW]	na [1/min]	Ma [Nm]	i	FRa [N]	fs			m [kg]
0.75	65.63	103	21.33	5820	4.73	LV67	80	24
(1HP)	74.49	90	18.79	5610	5.15	LW67		23
	90.87	74	15.41	5290	5.88			
	12.40	527	112.90	7110	0.85			
	13.76	475	101.77	7110	0.95			
	15.23	429	91.91	7110	1.05			
	16.98	385	82.45	7110	1.17			
	17.58	372	79.65	7110	1.21			
	19.29	339	72.56	7010	1.33			
	21.59	303	64.84	6845	1.49	LH57		22
	23.25	281	60.21	6735	1.60	LV57	80	24
	25.89	252	54.07	6575	1.60	LW57		23
	30.32	216	46.18	6335	1.60			
	32.96	198	42.48	6205	1.60			
	36.70	178	38.14	6040	1.60			
	43.31	151	32.33	5665	2.41			
	50.70	129	27.61	5445	2.68			
	55.12	119	25.40	5325	2.83			
	61.38	106	22.81	5175	3.04			
	55.39	122	25.27	5400	3.14			
	59.44	113	23.55	5300	3.30	LH57		21
	66.78	101	20.96	5130	3.56	LV57	80	21
	74.47	90	18.80	4975	3.83	LW57		20
	90.15	75	15.53	4710	4.35			
	121.43	55	11.53	4310	5.31			
	17.37	376	80.58	5420	0.80			
	17.99	363	77.84	5420	0.83			
	19.74	331	70.91	5420	0.91			
	22.09	296	63.37	5420	1.01			
	23.79	275	58.84	5420	1.09			
	26.50	247	52.84	5420	1.22	LH47		20
	31.02	211	45.13	5420	1.42	LV47	80	19
	33.73	194	41.51	5420	1.55	LW47		18
	37.56	174	37.28	5420	1.60			
	43.98	149	31.83	5420	2.02			
	51.49	127	27.19	5415	2.36			
	55.98	117	25.01	5300	2.57			
	62.34	105	22.46	5150	2.86			
	56.68	119	24.70	5360	2.52			
	60.82	111	23.02	5255	2.71	LH47		19
	68.33	99	20.49	5090	3.04	LV47	80	18
	76.20	88	18.37	4935	3.39	LW47		17
	92.25	73	15.18	4670	4.11			
	124.25	54	11.27	4280	5.27			
	25.91	252	54.03	3935	0.79			
	26.80	244	52.24	3820	0.82			
	31.81	205	44.01	3745	0.97	LH37		14
	34.93	187	40.08	3695	1.07	LV37	80	13
	40.08	163	34.93	3615	1.23	LW37		12
	45.13	145	31.02	3540	1.38			
	54.07	121	25.89	3415	1.60			
	57.14	118	24.50	3405	1.60			
	63.39	106	22.09	3325	1.60			
	70.19	96	19.95	3250	1.60			
	78.24	86	17.89	3165	1.60			
	88.90	76	15.75	3070	2.50			
	107.14	63	13.07	2925	2.88	LH37		13
	119.32	56	11.73	2845	3.09	LV37	80	13

1400 Input Rpm

Pm [kW]	na [1/min]	Ma [Nm]	i	FRa [N]	fs			m [kg]
0.75	139.69	48	10.02	2725	3.44	LW37		12
(1HP)	164.77	41	8.50	2600	3.83			
	207.81	32	6.74	2425	4.10			
	243.29	28	5.75	2315	4.56			
	286.98	23	4.88	2205	5.09			
	350.00	19	4.00	2080	5.81			
	71.10	92	19.69	1200	0.92	MH17	80	9
						MV17		8
	93.22	72	15.02	1260	0.99			
	110.64	61	12.65	1280	1.10			
	139.40	48	10.04	1290	1.26	MH17	80	9
	188.09	36	7.44	1270	1.52	MV17		8
	280.41	24	4.99	1200	1.94			
	345.74	19	4.05	1160	2.20			
	255.94	27	5.47	2760	1.60			
	282.83	25	4.95	2590	1.60			
	309.05	22	4.53	2580	1.60			
	397.73	17	3.52	2350	4.98			
	484.43	14	2.89	2260	6.70	XH67	80	14
	514.71	13	2.72	2200	6.59			
	595.74	12	2.35	2105	7.02			
	752.69	9	1.86	1965	8.02			
	864.20	8	1.62	1880	8.20			
	307.69	23	4.55	2150	1.60			
	345.68	20	4.05	2160	1.60			
	385.67	18	3.63	2020	3.61			
	438.87	16	3.19	1950	4.03			
	466.67	15	3.00	1915	4.15	XH57	80	12
	627.80	11	2.23	1760	4.77			
	880.50	8	1.59	1595	5.40			
	1068.70	6	1.31	1525	6.44			
1.1	0.60	14928	2318	62700	0.87			
(1.5HP)	0.71	12694	1971	62700	1.02			
	0.78	11578	1798	62700	1.12			
	0.87	10415	1617	62700	1.25	MH147 R77		404
	0.97	9276	1440	62700	1.40	MV147 R77	90	395
	1.08	8321	1292	62700	1.56	MW147 R77		380
	1.18	7661	1190	62700	1.70			
	1.39	6465	1004	62700	2.01			
	1.67	5403	839	62700	2.41			
	1.96	4609	716	62700	2.82			
	1.03	8718	1354	37500	0.80			
	1.12	8041	1249	37500	0.87	MH137 R77		254
	1.27	7084	1100	37500	0.99	MV137 R77	90	265
	1.52	5936	922	37500	1.18	MW137 R77		250
	1.61	5594	869	37500	1.25			
	1.09	8239	1279	37500	0.85			
	1.30	6952	1080	37500	1.01			
	1.53	5910	918	37500	1.18	MH137 R77		263
	1.68	5369	834	37500	1.30	MV137 R77	90	275
	1.92	4688	728	37500	1.49	MW137 R77		259
	2.06	4367	678	37500	1.60			
	2.50	3606	560	37500	1.94			
	2.96	3043	473	37500	2.30			
	2.01	4482	696	29500	0.96	MH107 R77		173
						MV107 R77	90	176
						MW107 R77		166
	2.35	3837	596	29500	1.12			

1400 Input Rpm

Pm [kW]	na [1/min]	Ma [Nm]	i	FRa [N]	fs			m [kg]
1.1	2.85	3169	492	29500	1.36	MH107 R77		181
(1.5HP)	3.37	2674	415	29500	1.61	MV107 R77	90	185
	4.02	2245	349	29500	1.92	MW107 R77		174
	4.66	1935	300	29500	2.22			
	5.52	1632	253	29500	2.63			
	3.10	3000	452	18100	1.00			
	3.68	2526	380	18100	1.19	LH97 R57		109
	4.17	2228	336	18100	1.35	LV97 R57	90	113
	4.92	1887	284	18100	1.59	LW97 R57		102
	5.72	1625	245	18100	1.85			
	6.15	1510	228	18100	1.99			
	5.32	1696	263	16900	0.88	LH87 R57		79
	6.05	1490	231	16900	1.01	LV87 R57	90	82
	6.99	1290	200	16900	1.16	LW87 R57		78
	5.32	1747	263	16900	0.86	LH87 R57		79
	6.12	1518	229	16900	0.99	LV87 R57	90	80
	6.93	1341	202	16900	1.12	LW87 R57		76
	6.95	1378	201.38	16900	1.09			
	7.79	1230	179.70	16900	1.09			
	8.69	1103	161.11	16900	1.09			
	10.19	941	137.42	16900	1.09			
	11.46	836	122.17	16900	1.85			
	12.44	770	112.52	16900	2.01			
	16.04	597	87.27	16900	2.59			
	19.55	490	71.60	16900	3.03	LH87		63
	21.95	437	63.77	16900	3.27	LV87	90	67
	22.75	421	61.54	16900	3.35	LW87		61
	25.54	375	54.81	16900	3.62			
	28.48	337	49.16	16900	3.89			
	30.93	310	45.27	16900	4.12			
	36.65	261	38.20	16900	4.61			
	44.12	217	31.73	16640	4.37			
	57.64	166	24.29	15325	5.23			
	69.79	137	20.06	14435	5.94			
	11.26	851	124.34	8620	0.88			
	12.78	750	109.54	8620	1.00			
	15.59	615	89.80	8620	1.09			
	16.54	579	84.62	8620	1.09			
	19.17	500	73.05	8620	1.50	LH77		34
	24.25	395	57.73	8410	1.90	LV77	90	39
	26.30	364	53.24	8250	2.06	LW77		35
	29.85	321	46.90	7995	2.34			
	35.62	269	39.31	7515	2.48			
	37.80	254	37.04	7405	2.58			
	43.78	219	31.97	7130	2.85			
	55.40	173	25.27	6695	3.33			
	60.06	164	23.31	6610	4.02	LH77		32
	77.44	128	18.08	6145	4.76	LV77	90	38
	94.38	105	14.83	5800	5.43	LW77		34
	105.97	93	13.21	5600	5.86			
	14.19	676	98.69	7560	0.89			
	15.09	635	92.80	7560	0.94			
	17.81	538	78.59	7560	1.09			
	20.32	472	68.90	7445	1.09			
	22.20	432	63.07	7040	1.09			
	24.04	399	58.23	7210	1.09	LH67		28
	26.81	357	52.21	7050	1.09	LV67	90	25
	30.52	314	45.87	6855	1.91	LW67		23

1400 Input Rpm

Pm [kW]	na [1/min]	Ma [Nm]	i	FRa [N]	fs			m [kg]
1.1	33.97	282	41.22	6505	1.77			
(1.5HP)	36.12	265	38.75	6420	1.85			
	43.72	219	32.02	6300	2.54			
	48.66	197	28.77	6000	2.25			
	61.14	157	22.90	5775	3.17			
	57.99	170	24.14	5840	2.97			
	65.63	151	21.33	5650	3.23	LH67		27
	74.49	133	18.79	5460	3.51	LV67	90	24
	90.87	109	15.41	5165	4.01	LW67		23
	111.70	88	12.53	4870	4.60			
	141.35	70	9.90	4545	5.38			
	16.98	564	82.45	6465	0.80			
	17.58	545	79.65	6440	0.83			
	19.29	497	72.56	6370	0.91			
	21.59	444	64.84	6275	1.01			
	23.25	412	60.21	6210	1.09	LH57		22
	25.89	370	54.07	6100	1.09	LV57	90	24
	30.32	316	46.18	5930	1.09	LW57		23
	32.96	291	42.48	5835	1.09			
	36.70	261	38.14	5705	1.09			
	43.31	221	32.33	5325	1.64			
	50.70	189	27.61	5150	1.82			
	55.12	174	25.40	5060	1.93			
	61.38	156	22.81	4935	2.07			
	55.39	178	25.27	5175	2.14			
	59.44	166	23.55	5085	2.25			
	66.78	148	20.96	4940	2.43			
	74.47	133	18.80	4805	2.61	LH57		21
	90.15	110	15.53	4565	2.97	LV57	90	21
	121.43	81	11.53	4205	3.62	LW57		20
	169.82	58	8.24	3820	4.52			
	203.08	49	6.89	3585	4.46			
	284.01	35	4.93	3250	5.58			
	26.50	362	52.84	5420	0.83			
	31.02	309	45.13	5420	0.97			
	33.73	284	41.51	5420	1.06	LH47		20
	37.56	255	37.28	5420	1.09	LV47	90	19
	43.98	218	31.83	5295	1.38	LW47		18
	51.49	186	27.19	5125	1.61			
	55.98	171	25.01	5030	1.75			
	62.34	154	22.46	4910	1.95			
	56.68	174	24.70	5130	1.72			
	60.82	162	23.02	5045	1.85			
	68.33	145	20.49	4900	2.08			
	76.20	130	18.37	4765	2.31	LH47		19
	92.25	107	15.18	4530	2.80	LV47	90	18
	124.25	80	11.27	4175	3.60	LW47		17
	173.77	57	8.06	3790	4.50			
	206.25	48	6.79	3565	4.45			
	288.44	34	4.85	3230	5.56			
	40.08	239	34.93	3205	0.84	LH37		14
	45.13	212	31.02	3175	0.94	LV37	90	13
	54.07	177	25.89	3110	1.09	LW37		12
	57.14	173	24.50	3125	1.09			
	63.39	156	22.09	3075	1.09			
	70.19	141	19.95	3025	1.09			
	78.24	126	17.89	2965	1.09			
	88.90	111	15.75	2890	1.70			

1400 Input Rpm

Pm [kW]	na [1/min]	Ma [Nm]	i	FRa [N]	fs			m [kg]
1.1	107.14	92	13.07	2775	1.96	LH37		13
(1.5HP)	119.32	83	11.73	2710	2.11	LV37	90	13
	139.69	71	10.02	2610	2.34	LW37		12
	164.77	60	8.50	2505	2.61			
	207.81	48	6.74	2340	2.80			
	243.29	41	5.75	2245	3.11			
	286.98	34	4.88	2145	3.47			
	350.00	28	4.00	2030	3.96			
	233.33	44	6.00	4970	2.40			
	273.44	37	5.12	4720	2.76	XH77	90	20
	295.36	34	4.74	4490	3.55			
	309.05	33	4.53	2500	1.09			
	397.73	26	3.52	2270	3.40			
	484.43	21	2.89	2200	4.57			
	514.71	20	2.72	2145	4.49	XH67	90	14
	595.74	17	2.35	2055	4.79			
	752.69	14	1.86	1930	5.47			
	864.20	12	1.62	1845	5.59			
	1000.00	10	1.40	1770	6.01			
	345.68	29	4.05	2080	1.09			
	385.67	26	3.63	1920	2.46			
	438.87	23	3.19	1860	2.75			
	466.67	22	3.00	1835	2.83	XH57	90	12
	627.80	16	2.23	1700	3.25			
	880.50	12	1.59	1545	3.68			
	1068.70	10	1.31	1495	4.39			
1.5	2.72	4525	515	62700	2.87	MH147 R87		382
(2HP)	3.17	3884	442	62700	3.35	MV147 R87	90	374
	3.47	3543	403	62700	3.67	MW147 R87		358
	0.78	15788	1798	62700	0.82			
	0.87	14203	1617	62700	0.92			
	0.97	12649	1440	62700	1.03			
	1.08	11347	1292	62700	1.15	MH147 R77		404
	1.18	10447	1190	62700	1.24	MV147 R77	90	395
	1.39	8816	1004	62700	1.47	MW147 R77		380
	1.67	7368	839	62700	1.76			
	1.96	6284	716	62700	2.07			
	2.22	5537	630	62700	2.35			
	2.69	4563	520	62700	2.85			
	1.52	8095	922	37500	0.86	MH137 R77		254
	1.61	7628	869	37500	0.92	MV137 R77	90	265
	1.87	6585	750	37500	1.06	MW137 R77		250
	2.03	6054	689	37500	1.16			
	1.53	8058	918	37500	0.87			
	1.68	7322	834	37500	0.96			
	1.92	6392	728	37500	1.10			
	2.06	5954	678	37500	1.18	MH137 R77		263
	2.50	4918	560	37500	1.42	MV137 R77	90	275
	2.96	4150	473	37500	1.69	MW137 R77		259
	3.22	3815	434	37500	1.83			
	3.79	3243	369	37500	2.16			
	4.39	2798	319	37500	2.50			
	2.85	4321	492	29500	1.00	MH107 R77		181
						MV107 R77	90	185
						MW107 R77		174
	3.17	3994	441	29500	1.08	MH107 R77		171
	3.56	3562	393	29500	1.21	MV107 R77	90	174
	4.18	3034	335	29500	1.42	MW107 R77		163

1400 Input Rpm

Pm [kW]	na [1/min]	Ma [Nm]	i	FRa [N]	fs			m [kg]
1.5	4.17	3038	336	18100	0.99	LH97 R57		109
(2HP)	4.92	2574	284	18100	1.17	LV97 R57	90	113
	5.72	2216	245	18100	1.35	LW97 R57		102
	6.15	2060	228	18100	1.46			
	6.95	1880	201.38	16900	0.80			
	7.79	1677	179.70	16900	0.80			
	8.69	1504	161.11	16900	0.80			
	10.19	1283	137.42	16900	0.80			
	11.46	1140	122.17	16900	1.36			
	12.44	1050	112.52	16900	1.48			
	16.04	815	87.27	16900	1.90			
	19.55	668	71.60	16900	2.22	LH87		63
	21.95	595	63.77	16900	2.40	LV87	90	67
	22.75	574	61.54	16900	2.46	LW87		61
	25.54	512	54.81	16900	2.66			
	28.48	459	49.16	16900	2.86			
	30.93	423	45.27	16900	3.02			
	36.65	357	38.20	16900	3.38			
	44.12	296	31.73	16395	3.21			
	57.64	227	24.29	15135	3.83			
	69.79	187	20.06	14280	4.35			
	61.34	220	22.83	14930	4.62	LH87		60
	70.59	191	19.83	14295	5.07	LV87	90	65
	79.95	169	17.51	13750	5.51	LW87		59
	15.59	838	89.80	8570	0.80			
	16.54	790	84.62	8500	0.80			
	19.17	682	73.05	8310	1.10			
	24.25	539	57.73	7965	1.39	LH77		34
	26.30	497	53.24	7840	1.51	LV77	90	39
	29.85	438	46.90	7635	1.71	LW77		35
	35.62	367	39.31	7165	1.82			
	37.80	346	37.04	7075	1.89			
	43.78	298	31.97	6845	2.09			
	55.40	236	25.27	6470	2.44			
	60.06	224	23.31	6425	2.95			
	77.44	174	18.08	6000	3.49			
	94.38	143	14.83	5680	3.98	LH77		32
	105.97	127	13.21	5495	4.30	LV77	90	38
	118.14	114	11.85	5330	4.62	LW77		34
	128.31	105	10.91	5200	4.89			
	152.06	89	9.21	4950	5.47			
	17.81	734	78.59	6905	0.80			
	20.32	643	68.90	6825	0.80			
	22.20	589	63.07	6365	0.80			
	24.04	543	58.23	6685	0.80			
	26.81	487	52.21	6580	0.80	LH67		28
	30.52	428	45.87	6440	1.40	LV67	90	25
	33.97	385	41.22	6065	1.30	LW67		23
	36.12	362	38.75	6010	1.36			
	43.72	299	32.02	6010	1.86			
	48.66	269	28.77	5695	1.65			
	61.14	214	22.90	5570	2.33			
	57.99	232	24.14	5615	2.18			
	65.63	205	21.33	5450	2.37			
	74.49	181	18.79	5280	2.58			
	90.87	148	15.41	5020	2.94	LH67		27
	111.70	121	12.53	4750	3.37	LV67	90	24
	141.35	95	9.90	4450	3.95	LW67		23

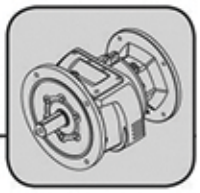

1400 Input Rpm

Pm [kW]	na [1/min]	Ma [Nm]	i	FRa [N]	fs			m [kg]
1.5	230.90	58	6.06	3825	4.53			
(2HP)	267.48	50	5.23	3660	5.00			
	338.46	40	4.14	3415	5.84			
	23.25	562	60.21	5605	0.80			
	25.89	505	54.07	5560	0.80			
	30.32	431	46.18	5465	0.80			
	32.96	396	42.48	5405	0.80	LH57		22
	36.70	356	38.14	5325	0.80	LV57	90	24
	43.31	302	32.33	4935	1.20	LW57		23
	50.70	258	27.61	4820	1.34			
	55.12	237	25.40	4755	1.41			
	61.38	213	22.81	4660	1.52			
	55.39	243	25.27	4910	1.57			
	59.44	227	23.55	4840	1.65			
	66.78	202	20.96	4720	1.78			
	74.47	181	18.80	4610	1.92	LH57		21
	90.15	149	15.53	4405	2.18	LV57	90	21
	121.43	111	11.53	4090	2.65	LW57		20
	169.82	79	8.24	3735	3.32			
	203.08	66	6.89	3500	3.27			
	284.01	47	4.93	3185	4.09			
	345.18	39	4.06	3015	4.66			
	37.56	348	37.28	5280	0.80			
	43.98	297	31.83	4910	1.01	LH47		20
	51.49	254	27.19	4795	1.18	LV47	90	19
	55.98	233	25.01	4730	1.29	LW47		18
	62.34	210	22.46	4640	1.43			
	56.68	238	24.70	4870	1.26			
	60.82	221	23.02	4800	1.35			
	68.33	197	20.49	4685	1.52			
	76.20	177	18.37	4570	1.70	LH47		19
	92.25	146	15.18	4370	2.05	LV47	90	18
	124.25	108	11.27	4055	2.64	LW47		17
	173.77	78	8.06	3705	3.30			
	206.25	65	6.79	3480	3.26			
	288.44	47	4.85	3170	4.08			
	350.58	38	3.99	2995	4.65			
	54.07	242	25.89	2760	0.80	LH37		14
						LV37	90	13
						LW37		12
	57.14	236	24.50	2810	0.80			
	63.39	213	22.09	2790	0.80			
	70.19	192	19.95	2765	0.80			
	78.24	172	17.89	2735	1.09			
	88.90	152	15.75	2685	1.25	LH37		13
	107.14	126	13.07	2610	1.44	LV37	90	13
	119.32	113	11.73	2560	1.55	LW37		12
	139.69	96	10.02	2480	1.72			
	164.77	82	8.50	2395	1.92			
	207.81	65	6.74	2250	2.05			
	243.29	55	5.75	2165	2.28			
	286.98	47	4.88	2080	2.55			
	350.00	38	4.00	1975	2.91			
	233.33	60	6.00	4910	0.80			
	273.44	51	5.12	4660	0.80			
	295.36	47	4.74	4390	2.60			
	307.69	45	4.55	4350	2.94			
	334.13	42	4.19	4240	3.43	XH77	90	20

1400 Input Rpm

Pm [kW]	na [1/min]	Ma [Nm]	i	FRa [N]	fs			m [kg]
1.5 (2HP)	373.33	37	3.75	4130	4.11			
	430.77	32	3.25	4030	5.24			
	524.34	26	2.67	3720	4.99			
	588.24	24	2.38	3635	5.71			
	309.05	45	4.53	2410	0.80			
	397.73	35	3.52	2180	2.49			
	484.43	29	2.89	2140	3.35			
	514.71	27	2.72	2080	3.29	XH67	90	14
	595.74	23	2.35	2000	3.51			
	752.69	18	1.86	1890	4.01			
	864.20	16	1.62	1805	4.10			
	1000.00	14	1.40	1735	4.41			
	345.68	40	4.05	1830	0.80			
	385.67	36	3.63	1625	1.81			
	438.87	32	3.19	1650	2.01			
	466.67	30	3.00	1655	2.07	XH57	90	12
	627.80	22	2.23	1625	2.39			
	880.50	16	1.59	1490	2.70			
	1068.70	13	1.31	1465	3.22			
2.2 (3HP)	0.85	21225	1648	88200	0.85			
	0.94	19187	1490	88200	0.94			
	1.15	15658	1216	88200	1.15	MH167 R97		609
	1.36	13297	1032	88200	1.35	MV167 R97	100	608
	1.50	12020	933	88200	1.50			
	1.70	10620	825	88200	1.69			
	1.88	9600	745	88200	1.87			
	2.12	8490	659	88200	2.12			
	2.72	6636	515	62700	1.96			
	3.17	5697	442	62700	2.28	MH147 R87		385
	3.47	5196	403	62700	2.50	MV147 R87	100	376
	3.84	4695	365	62700	2.77	MW147 R87		361
	4.18	4309	335	62700	3.02			
	1.18	15323	1190	62700	0.85			
	1.39	12930	1004	62700	1.01			
	1.67	10807	839	62700	1.20	MH147 R77		406
	1.96	9217	716	62700	1.41	MV147 R77	100	398
	2.22	8121	630	62700	1.60	MW147 R77		382
	2.69	6693	520	62700	1.94			
	3.26	5528	429	62700	2.35			
	2.06	8733	678	37500	0.80	MH137 R77		266
	2.50	7213	560	37500	0.97	MV137 R77	100	277
						MW137 R77		261
	2.56	7258	547	37500	0.96			
	2.79	6673	503	37500	1.05			
	3.30	5629	424	37500	1.24	MH137 R77		255
	3.59	5176	390	37500	1.35	MV137 R77	100	266
	4.02	4619	348	37500	1.52	MW137 R77		250
	4.52	4114	310	37500	1.70			
	4.92	3782	285	37500	1.85			
	4.02	4490	349	29500	0.96	MH107 R77		184
	4.66	3869	300	29500	1.11	MV107 R77	100	187
	5.52	3265	253	29500	1.32	MW107 R77		177
	6.55	2751	214	29500	1.56			
	4.18	4450	335	29500	0.97	MH107 R77		173
						MV107 R77	100	177
						MW107 R77		166
	6.76	2670	207	18100	1.12	LH97 R57		114
						LV97 R57	100	121

1400 Input Rpm

Pm [kW]	na [1/min]	Ma [Nm]	i	FRa [N]	fs			m [kg]
2.2						LW97 R57		110
(3HP)	7.03	2725	199.06	18100	1.10			
	7.73	2479	181.06	18100	1.21			
	8.42	2277	166.33	18100	1.32			
	9.69	1979	144.53	18100	1.52			
	10.97	1747	127.61	18100	1.72			
	12.56	1525	111.42	18100	1.97			
	14.32	1338	97.76	18100	2.24			
	14.80	1295	94.59	18100	2.32	LH97		99
	16.40	1168	85.35	18100	2.57	LV97	100	106
	16.95	1131	82.59	18100	2.65	LW97		114
	18.02	1064	77.70	18100	2.82			
	19.32	992	72.46	18100	3.02			
	20.99	913	66.71	18100	3.29			
	22.13	866	63.27	18100	3.46			
	23.52	815	59.52	18100	3.68			
	27.40	700	51.10	18100	4.29			
	31.41	610	44.57	18100	4.67			
	37.00	518	37.84	18100	5.33			
	42.42	466	33.00	18100	5.98	LH97		95
						LV97	100	102
						LW97		93
	11.46	1673	122.17	16900	0.93			
	12.44	1540	112.52	16900	1.01			
	16.04	1195	87.27	16900	1.30			
	19.55	980	71.60	16900	1.52			
	21.95	873	63.77	16900	1.64			
	22.75	842	61.54	16900	1.68	LH87		66
	25.54	750	54.81	16900	1.81	LV87	100	70
	28.48	673	49.16	16900	1.95	LW87		64
	30.93	620	45.27	16900	2.06			
	36.65	523	38.20	16900	2.30			
	44.12	434	31.73	15970	2.19			
	57.64	333	24.29	14810	2.61			
	69.79	275	20.06	14010	2.97			
	61.34	322	22.83	14650	3.15			
	70.59	280	19.83	14055	3.46			
	79.95	247	17.51	13540	3.76			
	91.56	216	15.29	12995	4.12	LH87		63
	107.86	183	12.98	12365	4.59	LV87	100	68
	123.53	160	11.33	11860	5.02	LW87		62
	131.30	150	10.66	11635	5.23			
	152.94	129	9.15	11095	5.79			
	206.60	96	6.78	10055	5.94			
	24.25	790	57.73	7190	0.95			
	26.30	729	53.24	7120	1.03			
	29.85	642	46.90	7000	1.17	LH77		37
	35.62	538	39.31	6560	1.24	LV77	100	41
	37.80	507	37.04	6500	1.29	LW77		37
	43.78	438	31.97	6350	1.42			
	55.40	346	25.27	6080	1.66			
	60.06	329	23.31	6100	2.01			
	77.44	255	18.08	5750	2.38			
	94.38	209	14.83	5475	2.71			
	105.97	186	13.21	5315	2.93	LH77		35
	118.14	167	11.85	5165	3.15	LV77	100	41
	128.31	154	10.91	5050	3.33	LW77		37
	152.06	130	9.21	4820	3.73			

1400 Input Rpm

Pm [kW]	na [1/min]	Ma [Nm]	i	FRa [N]	fs			m [kg]
2.2	242.11	82	5.78	4180	4.31			
(3HP)	293.14	67	4.78	3955	4.90			
	347.40	57	4.03	3765	5.49			
	30.52	628	45.87	5715	0.96			
	33.97	564	41.22	5295	0.89	LH67		31
	36.12	531	38.75	5285	0.92	LV67	100	29
	43.72	438	32.02	5500	1.27	LW67		27
	48.66	394	28.77	5155	1.13			
	61.14	313	22.90	5205	1.59			
	57.99	341	24.14	5220	1.49			
	65.63	301	21.33	5100	1.61			
	74.49	265	18.79	4975	1.76			
	90.87	217	15.41	4770	2.00	LH67		30
	111.70	177	12.53	4545	2.30	LV67	100	28
	141.35	140	9.90	4290	2.69	LW67		26
	230.90	86	6.06	3705	3.09			
	267.48	74	5.23	3560	3.41			
	338.46	58	4.14	3335	3.98			
	43.31	443	32.33	4255	0.82	LH57		25
	50.70	378	27.61	4235	0.91	LV57	100	28
	55.12	348	25.40	4215	0.96	LW57		26
	61.38	312	22.81	4180	1.04			
	55.39	357	25.27	4455	1.07			
	59.44	332	23.55	4415	1.12			
	66.78	296	20.96	4345	1.21			
	74.47	265	18.80	4270	1.31	LH57		24
	90.15	219	15.53	4125	1.48	LV57	100	25
	121.43	163	11.53	3880	1.81	LW57		23
	169.82	116	8.24	3585	2.26			
	203.08	97	6.89	3350	2.23			
	284.01	70	4.93	3080	2.79			
	345.18	57	4.06	2925	3.18			
	51.49	372	27.19	4215	0.81	LH47		23
	55.98	342	25.01	4195	0.88	LV47	100	21
	62.34	307	22.46	4160	0.98	LW47		21
	56.68	349	24.70	4415	0.86			
	60.82	325	23.02	4380	0.92			
	68.33	289	20.49	4305	1.04			
	76.20	259	18.37	4235	1.16	LH47		22
	92.25	214	15.18	4090	1.40	LV47	100	21
	124.25	159	11.27	3850	1.80	LW47		20
	173.77	114	8.06	3560	2.25			
	206.25	96	6.79	3330	2.22			
	288.44	68	4.85	3065	2.78			
	350.58	56	3.99	2910	3.17			
	88.90	222	15.75	2330	0.85			
	107.14	184	13.07	2315	0.98			
	119.32	166	11.73	2295	1.05			
	139.69	141	10.02	2255	1.17	LH37		14
	164.77	120	8.50	2205	1.31	LV37	100	14
	207.81	95	6.74	2085	1.40	LW37		14
	243.29	81	5.75	2025	1.55			
	286.98	69	4.88	1960	1.74			
	350.00	56	4.00	1880	1.98			
	295.36	69	4.74	3890	1.77			
	307.69	66	4.55	3910	2.01			
	334.13	61	4.19	3860	2.34			
	373.33	55	3.75	3900	2.80			

1400 Input Rpm

Pm [kW]	na [1/min]	Ma [Nm]	i	FRa [N]	fs			m [kg]
2.2	430.77	47	3.25	3950	3.57	XH77	100	23
(3HP)	524.34	39	2.67	3620	3.41			
	588.24	35	2.38	3565	3.89			
	657.28	31	2.13	3465	4.21			
	714.29	29	1.96	3335	4.03			
	843.37	24	1.66	3170	4.28			
	397.73	51	3.52	1790	1.70			
	484.43	42	2.89	1970	2.29			
	514.71	40	2.72	1905	2.25			
	595.74	34	2.35	1895	2.39	XH67	100	17
	752.69	27	1.86	1820	2.74			
	864.20	24	1.62	1735	2.80			
	1000.00	20	1.40	1680	3.01			
	438.87	46	3.19	990	1.37			
	466.67	44	3.00	1030	1.41			
	627.80	32	2.23	1165	1.63	XH57	100	15
	880.50	23	1.59	1205	1.84			
	1068.70	19	1.31	1315	2.20			
3	1.15	21352	1216	88200	0.84			
(4HP)	1.36	18133	1032	88200	0.99			
	1.50	16391	933	88200	1.10	MH167 R97		609
	1.70	14482	825	88200	1.24	MV167 R97	100	608
	1.88	13091	745	88200	1.37			
	2.12	11578	659	88200	1.55			
	2.54	9680	551	88200	1.86			
	2.72	9049	515	62700	1.44			
	3.17	7769	442	62700	1.67	MH147 R87		385
	3.47	7086	403	62700	1.83	MV147 R87	100	376
	3.84	6403	365	62700	2.03	MW147 R87		361
	4.18	5876	335	62700	2.21			
	4.87	5045	287	62700	2.58			
	2.69	9127	520	62700	1.42	MH147 R77		406
	3.26	7538	429	62700	1.72	MV147 R77	100	398
						MW147 R77		382
	2.96	8300	473	37500	0.84			
	3.22	7631	434	37500	0.92	MH137 R77		266
	3.79	6486	369	37500	1.08	MV137 R77	100	277
	4.39	5596	319	37500	1.25	MW137 R77		261
	4.94	4980	284	37500	1.41			
	5.87	4186	238	37500	1.67			
	3.59	7058	390	37500	0.99	MH137 R77		255
						MV137 R77	100	266
						MW137 R77		250
	5.52	4452	253	29500	0.97	MH107 R77		184
	6.55	3752	214	29500	1.15	MV107 R77	100	187
	7.42	3315	189	29500	1.30	MW107 R77		177
	5.90	4300	237	29500	1.00	MH107 R77		173
						MV107 R77	100	177
						MW107 R77		166
	7.03	3716	199.06	18100	0.81			
	7.73	3380	181.06	18100	0.89			
	8.42	3105	166.33	18100	0.97			
	9.69	2698	144.53	18100	1.11			
	10.97	2382	127.61	18100	1.26			
	12.56	2080	111.42	18100	1.44			
	14.32	1825	97.76	18100	1.64			
	14.80	1766	94.59	18100	1.70			
	16.40	1593	85.35	18100	1.88	LH97		99

1400 Input Rpm

Pm [kW]	na [1/min]	Ma [Nm]	i	FRa [N]	fs			m [kg]
3	16.95	1542	82.59	18100	1.95	LV97	100	106
(4HP)	18.02	1451	77.70	18100	2.07	LW97		114
	19.32	1353	72.46	18100	2.22			
	20.99	1245	66.71	18100	2.41			
	22.13	1181	63.27	18100	2.54			
	23.52	1111	59.52	18100	2.70			
	27.40	954	51.10	18100	3.14			
	31.41	832	44.57	18100	3.42			
	37.00	706	37.84	18100	3.91			
	48.30	541	28.98	18100	4.67			
	55.32	472	25.31	18100	5.11			
	42.42	635	33.00	18100	4.38	LH97		95
	48.11	560	29.10	18100	4.86	LV97	100	102
						LW97		93
	16.04	1629	87.27	16900	0.95			
	19.55	1337	71.60	16900	1.11			
	21.95	1190	63.77	16900	1.20			
	22.75	1149	61.54	16900	1.23			
	25.54	1023	54.81	16900	1.33	LH87		66
	28.48	918	49.16	16900	1.43	LV87	100	70
	30.93	845	45.27	16900	1.51	LW87		64
	36.65	713	38.20	16510	1.69			
	44.12	592	31.73	15475	1.60			
	57.64	453	24.29	14435	1.92			
	69.79	374	20.06	13700	2.18			
	61.34	439	22.83	14340	2.31			
	70.59	382	19.83	13785	2.54			
	79.95	337	17.51	13300	2.76			
	91.56	294	15.29	12785	3.02			
	107.86	250	12.98	12185	3.37	LH87		63
	123.53	218	11.33	11700	3.68	LV87	100	68
	131.30	205	10.66	11490	3.84	LW87		62
	152.94	176	9.15	10970	4.25			
	206.60	130	6.78	9945	4.35			
	243.37	111	5.75	9455	4.86			
	296.26	91	4.73	8895	5.54			
	29.85	876	46.90	6280	0.86			
	35.62	734	39.31	5860	0.91	LH77		37
	37.80	691	37.04	5845	0.95	LV77	100	41
	43.78	597	31.97	5785	1.04	LW77		37
	55.40	472	25.27	5635	1.22			
	60.06	449	23.31	5730	1.47			
	77.44	348	18.08	5465	1.74			
	94.38	285	14.83	5240	1.99			
	105.97	254	13.21	5105	2.15	LH77		35
	118.14	228	11.85	4975	2.31	LV77	100	41
	128.31	210	10.91	4875	2.44	LW77		37
	152.06	177	9.21	4675	2.74			
	242.11	111	5.78	4075	3.16			
	293.14	92	4.78	3870	3.59			
	347.40	78	4.03	3690	4.03			
	43.72	598	32.02	4925	0.93	LH67		31
	48.66	537	28.77	4540	0.83	LV67	100	29
	61.14	427	22.90	4790	1.16	LW67		27
	57.99	465	24.14	4770	1.09			
	65.63	411	21.33	4705	1.18			
	74.49	362	18.79	4625	1.29			
	90.87	297	15.41	4480	1.47	LH67		30

1400 Input Rpm

Pm [kW]	na [1/min]	Ma [Nm]	i	FRa [N]	fs			m [kg]
3 (4HP)	111.70	241	12.53	4315	1.69	LV67	100	28
	141.35	191	9.90	4105	1.97	LW67		26
	230.90	117	6.06	3570	2.26			
	267.48	101	5.23	3445	2.50			
	338.46	80	4.14	3245	2.92			
	59.44	453	23.55	3930	0.82			
	66.78	403	20.96	3910	0.89			
	74.47	362	18.80	3880	0.96			
	90.15	299	15.53	3805	1.09	LH57		24
	121.43	222	11.53	3640	1.33	LV57	100	25
	169.82	159	8.24	3415	1.66	LW57		23
	203.08	133	6.89	3180	1.64			
	284.01	95	4.93	2955	2.05			
	345.18	78	4.06	2825	2.33			
	76.20	354	18.37	3845	0.85			
	92.25	292	15.18	3770	1.03			
	124.25	217	11.27	3610	1.32	LH47		22
	173.77	155	8.06	3390	1.65	LV47	100	21
	206.25	131	6.79	3160	1.63	LW47		20
	288.44	93	4.85	2940	2.04			
	350.58	77	3.99	2810	2.32			
	139.69	193	10.02	1995	0.86			
	164.77	164	8.50	1985	0.96	LH37		14
	207.81	130	6.74	1895	1.03	LV37	100	14
	243.29	111	5.75	1865	1.14	LW37		14
	286.98	94	4.88	1825	1.27			
	350.00	77	4.00	1765	1.45			
	254.55	109	5.50	5110	1.94			
	288.66	96	4.85	4950	2.25	XH87	100	37
	316.03	88	4.43	4800	3.29			
	371.35	75	3.77	4690	4.08			
	295.36	94	4.74	3070	1.30			
	307.69	90	4.55	3140	1.47			
	334.13	83	4.19	3130	1.72	XH77	100	23
	373.33	74	3.75	3260	2.05			
	430.77	64	3.25	3480	2.62			
	397.73	70	3.52	1150	1.25			
	484.43	57	2.89	1480	1.68			
	514.71	54	2.72	1415	1.65			
	595.74	47	2.35	1455	1.76	XH67	100	17
	752.69	37	1.86	1535	2.01			
	864.20	32	1.62	1495	2.05			
	1000.00	28	1.40	1505	2.21			
	438.87	63	3.19	240	1.01			
	466.67	60	3.00	315	1.04			
	627.80	44	2.23	605	1.19	XH57	100	15
	880.50	32	1.59	760	1.35			
	1068.70	26	1.31	965	1.61			
4 (5.4HP)	1.70	19310	825	88200	0.93			
	1.88	17455	745	88200	1.03			
	2.12	15437	659	88200	1.17	MH167 R97	112	609
	2.54	12906	551	88200	1.39	MV167 R97		608
	2.93	11196	478	88200	1.61			
	3.41	9619	411	88200	1.87			
	3.70	8863	378	88200	2.03			
	2.72	12066	515	62700	1.08			
	3.17	10358	442	62700	1.26			
	3.47	9448	403	62700	1.38			

1400 Input Rpm

Pm [kW]	na [1/min]	Ma [Nm]	i	FRa [N]	fs			m [kg]
4	3.84	8537	365	62700	1.52	MH147 R87		385
(5.4HP)	4.18	7835	335	62700	1.66	MV147 R87	112	376
	4.87	6726	287	62700	1.93	MW147 R87		361
	5.72	5737	245	62700	2.27			
	6.59	4978	213	62700	2.61			
	7.67	4273	182	62700	3.04			
	8.28	3961	169	62700	3.28			
	2.69	12169	520	62700	1.07	MH147 R77		406
	3.26	10050	429	62700	1.29	MV147 R77	112	398
						MW147 R77		382
	3.79	8648	369	37500	0.81	MH137 R77		266
	4.39	7461	319	37500	0.94	MV137 R77	112	277
	4.94	6640	284	37500	1.05	MW137 R77		261
	5.87	5582	238	37500	1.25			
	4.02	8398	348	37500	0.83	MH137 R77		255
	4.52	7480	310	37500	0.94	MV137 R77	112	266
	4.92	6877	285	37500	1.02	MW137 R77		250
	7.42	4420	189	29500	0.97	MH107 R77		184
						MV107 R77	112	187
						MW107 R77		177
	7.37	4586	190	29500	0.94	MH107 R77		173
	8.22	4113	170	29500	1.05	MV107 R77	112	177
						MW107 R77		166
	9.69	3597	144.53	18100	0.83			
	10.97	3176	127.61	18100	0.94			
	12.56	2773	111.42	18100	1.08			
	14.32	2433	97.76	18100	1.23			
	14.80	2354	94.59	18100	1.27			
	16.40	2124	85.35	18100	1.41			
	16.95	2056	82.59	18100	1.46			
	18.02	1934	77.70	18100	1.55	LH97		99
	19.32	1804	72.46	18100	1.66	LV97	112	106
	20.99	1660	66.71	18100	1.81	LW97		114
	22.13	1575	63.27	18100	1.91			
	23.52	1482	59.52	18100	2.02			
	27.40	1272	51.10	18100	2.36			
	31.41	1109	44.57	18100	2.57			
	37.00	942	37.84	18100	2.93			
	48.30	721	28.98	18100	3.50			
	55.32	630	25.31	18100	3.83			
	42.42	847	33.00	18100	3.29	LH97		95
	48.11	747	29.10	18100	3.64	LV97	112	102
	65.94	545	21.23	18100	4.71	LW97		93
	82.56	435	16.96	17600	5.85			
	19.55	1782	71.60	16900	0.83			
	21.95	1587	63.77	16900	0.90			
	22.75	1532	61.54	16900	0.92			
	25.54	1364	54.81	16900	1.00	LH87		66
	28.48	1224	49.16	16755	1.07	LV87	112	70
	30.93	1127	45.27	16470	1.13	LW87		64
	36.65	951	38.20	15875	1.27			
	44.12	790	31.73	14865	1.20			
	57.64	605	24.29	13960	1.44			
	69.79	499	20.06	13310	1.63			
	61.34	586	22.83	13945	1.73			
	70.59	509	19.83	13440	1.90			
	79.95	449	17.51	13000	2.07			
	91.56	392	15.29	12525	2.26			

1400 Input Rpm

Pm [kW]	na [1/min]	Ma [Nm]	i	FRa [N]	fs			m [kg]
4	107.86	333	12.98	11960	2.52	LH87		63
(5.4HP)	123.53	291	11.33	11505	2.76	LV87	112	68
	131.30	274	10.66	11305	2.88	LW87		62
	152.94	235	9.15	10810	3.19			
	206.60	174	6.78	9810	3.27			
	243.37	148	5.75	9340	3.64			
	296.26	121	4.73	8805	4.15			
	345.10	104	4.06	8400	4.60			
	55.40	629	25.27	5075	0.92	LH77		37
						LV77	112	41
						LW77		37
	60.06	598	23.31	5270	1.10			
	77.44	464	18.08	5105	1.31			
	94.38	381	14.83	4945	1.49			
	105.97	339	13.21	4845	1.61	LH77		35
	118.14	304	11.85	4740	1.73	LV77	112	41
	128.31	280	10.91	4660	1.83	LW77		37
	152.06	236	9.21	4490	2.05			
	242.11	148	5.78	3945	2.37			
	293.14	123	4.78	3760	2.70			
	347.40	103	4.03	3595	3.02			
	61.14	570	22.90	4275	0.87	LH67		31
						LV67	112	29
						LW67		27
	57.99	619	24.14	4210	0.82			
	65.63	547	21.33	4210	0.89			
	74.49	482	18.79	4190	0.97			
	90.87	395	15.41	4125	1.10	LH67		30
	111.70	322	12.53	4020	1.27	LV67	112	28
	141.35	254	9.90	3875	1.48	LW67		26
	230.90	156	6.06	3405	1.70			
	267.48	134	5.23	3300	1.87			
	338.46	106	4.14	3130	2.19			
	90.15	398	15.53	3405	0.82			
	121.43	296	11.53	3345	0.99	LH57		24
	169.82	212	8.24	3205	1.24	LV57	112	25
	203.08	177	6.89	2965	1.23	LW57		23
	284.01	126	4.93	2805	1.53			
	345.18	104	4.06	2695	1.75			
	124.25	289	11.27	3315	0.99			
	173.77	207	8.06	3175	1.24	LH47		22
	206.25	174	6.79	2950	1.22	LV47	112	21
	288.44	125	4.85	2790	1.53	LW47		20
	350.58	102	3.99	2685	1.74			
	254.55	145	5.50	4880	1.46			
	288.66	128	4.85	4740	1.69	XH87	112	37
	316.03	117	4.43	4600	2.47			
	371.35	100	3.77	4550	3.06			
	334.13	111	4.19	2220	1.29			
	373.33	99	3.75	2460	1.54			
	430.77	86	3.25	2850	1.96			
	524.34	71	2.67	2550	1.87	XH77	112	23
	588.24	63	2.38	2755	2.14			
	657.28	56	2.13	2805	2.32			
	714.29	52	1.96	2650	2.22			
	843.37	44	1.66	2610	2.35			
	484.43	76	2.89	870	1.26			
	514.71	72	2.72	805	1.24			

1400 Input Rpm

Pm [kW]	na [1/min]	Ma [Nm]	i	FRa [N]	fs			m [kg]
4	595.74	62	2.35	910	1.32			
(5.4HP)	752.69	49	1.86	1095	1.50	XH67	112	17
	864.20	43	1.62	1085	1.54			
	1000.00	37	1.40	1140	1.65			
	880.50	42	1.59	205	1.01	XH57	112	15
	1068.70	35	1.31	530	1.21			
5.5	2.12	21225	659	88200	0.85			
(7.4HP)	2.54	17746	551	88200	1.01			
	2.93	15394	478	88200	1.17	MH167 R97	132S	615
	3.41	13227	411	88200	1.36	MV167 R97		613
	3.70	12187	378	88200	1.48			
	4.26	10574	328	88200	1.70			
	4.87	9250	287	88200	1.95			
	3.17	14243	442	62700	0.91			
	3.47	12991	403	62700	1.00			
	3.84	11739	365	62700	1.11	MH147 R87		391
	4.18	10773	335	62700	1.21	MV147 R87	132S	382
	4.87	9249	287	62700	1.41	MW147 R87		367
	5.72	7888	245	62700	1.65			
	6.59	6845	213	62700	1.90			
	7.67	5876	182	62700	2.21			
	12.12	3953	115.50	29500	1.09			
	13.11	3654	106.76	29500	1.18			
	13.59	3526	103.02	29500	1.22			
	16.19	2960	86.50	29500	1.45			
	17.51	2736	79.95	29500	1.57			
	20.51	2336	68.27	29500	1.84			
	22.26	2153	62.90	29500	2.00	MH107		167
	26.07	1838	53.71	29500	2.34	MV107	132S	182
	26.41	1814	53.00	29500	2.37	MW107		182
	31.46	1523	44.50	28325	2.82			
	35.43	1352	39.52	27565	3.18			
	40.90	1172	34.23	26480	3.52			
	47.90	1000	29.23	25325	3.80			
	54.86	873	25.52	24460	4.29			
	64.24	746	21.79	23355	4.62			
	106.95	448	13.09	20035	5.81			
	57.37	861	24.40	24145	4.41	MH107		161
	64.32	768	21.77	23385	4.76	MV107	132S	176
						MW107		176
	14.32	3346	97.76	18100	0.90			
	14.80	3237	94.59	18100	0.93			
	16.40	2921	85.35	18100	1.03			
	16.95	2827	82.59	18100	1.06			
	18.02	2659	77.70	18100	1.13			
	19.32	2480	72.46	18100	1.21	LH97		104
	20.99	2283	66.71	18100	1.31	LV97	132S	112
	22.13	2165	63.27	18100	1.39	LW97		103
	23.52	2037	59.52	18100	1.47			
	27.40	1749	51.10	18100	1.72			
	31.41	1525	44.57	18100	1.87			
	37.00	1295	37.84	18100	2.13			
	48.30	992	28.98	18100	2.55			
	55.32	866	25.31	18100	2.79			
	42.42	1164	33.00	18100	2.39			
	48.11	1027	29.10	18100	2.65	LH97		101
	65.94	749	21.23	18100	3.43	LV97	132S	108
	82.56	598	16.96	17200	4.25	LW97		99

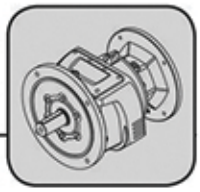

1400 Input Rpm

Pm [kW]	na [1/min]	Ma [Nm]	i	FRa [N]	fs			m [kg]
5.5	103.28	478	13.56	16100	4.97			
(7.4HP)	164.86	300	8.49	13910	5.57			
	30.93	1549	45.27	15340	0.82			
	36.65	1307	38.20	14915	0.92	LH87		71
	44.12	1086	31.73	13945	0.87	LV87	132S	76
	57.64	831	24.29	13260	1.05	LW87		70
	69.79	687	20.06	12730	1.19			
	61.34	805	22.83	13355	1.26			
	70.59	700	19.83	12930	1.38			
	79.95	618	17.51	12545	1.50			
	91.56	539	15.29	12130	1.65			
	107.86	458	12.98	11625	1.84	LH87		69
	123.53	400	11.33	11215	2.01	LV87	132S	73
	131.30	376	10.66	11030	2.09	LW87		67
	152.94	323	9.15	10575	2.32			
	206.60	239	6.78	9605	2.37			
	243.37	203	5.75	9170	2.65			
	296.26	167	4.73	8660	3.02			
	345.10	143	4.06	8280	3.34			
	60.06	822	23.31	4575	0.80			
	77.44	638	18.08	4570	0.95			
	94.38	523	14.83	4505	1.09			
	105.97	466	13.21	4450	1.17	LH77		42
	118.14	418	11.85	4390	1.26	LV77	132S	48
	128.31	385	10.91	4335	1.33	LW77		44
	152.06	325	9.21	4220	1.49			
	242.11	204	5.78	3745	1.73			
	293.14	169	4.78	3595	1.96			
	347.40	142	4.03	3460	2.20			
	219.44	230	6.38	9340	1.78			
	254.55	200	5.50	8970	2.15	XH107	132S	77
	285.71	180	4.90	8690	3.84			
	247.79	206	5.65	7960	1.82			
	282.26	180	4.96	7410	2.22			
	316.74	161	4.42	7190	3.27			
	367.45	139	3.81	7110	3.79			
	402.30	127	3.48	6730	4.15			
	456.03	112	3.07	6680	4.70	XH97	132S	56
	522.39	97	2.68	6240	5.39			
	603.45	84	2.32	5990	5.80			
	622.22	82	2.25	5970	5.68			
	660.38	77	2.12	5830	6.03			
	740.74	69	1.89	5630	6.36			
	818.71	62	1.71	5560	7.29			
	316.03	161	4.43	3890	1.80			
	371.35	137	3.77	4200	2.22			
	395.48	129	3.54	4060	2.33			
	438.87	116	3.19	4040	2.45	XH87	132S	42
	494.70	103	2.83	3960	2.59			
	555.56	92	2.52	3850	2.74			
	619.47	82	2.26	3750	2.87			
	654.21	78	2.14	3700	2.94			
	430.77	118	3.25	1890	1.43			
	524.34	97	2.67	1610	1.36			
	588.24	87	2.38	1965	1.56	XH77	132S	30
	657.28	77	2.13	2100	1.68			
	714.29	71	1.96	1935	1.61			
	843.37	60	1.66	1970	1.71			

1400 Input Rpm

Pm [kW]	na [1/min]	Ma [Nm]	i	FRa [N]	fs			m [kg]
7.5	2.93	20992	478	88200	0.86			
(10HP)	3.41	18036	411	88200	1.00	MH167 R97		615
	3.70	16619	378	88200	1.08	MV167 R97	132M	613
	4.26	14419	328	88200	1.25			
	4.87	12614	287	88200	1.43			
	4.18	14691	335	62700	0.88			
	4.87	12612	287	62700	1.03	MH147 R87		391
	5.72	10757	245	62700	1.21	MV147 R87	132M	382
	6.59	9333	213	62700	1.39	MW147 R87		367
	7.67	8013	182	62700	1.62			
	8.28	7428	169	62700	1.75			
	12.12	5390	115.50	29500	0.80			
	13.11	4982	106.76	29500	0.86			
	13.59	4808	103.02	29500	0.89			
	16.19	4037	86.50	29500	1.07			
	17.51	3731	79.95	29500	1.15			
	20.51	3186	68.27	29080	1.35			
	22.26	2935	62.90	28885	1.46	MH107		167
	26.07	2507	53.71	27910	1.72	MV107	132M	182
	26.41	2474	53.00	28130	1.74	MW107		182
	31.46	2077	44.50	27015	2.07			
	35.43	1844	39.52	26430	2.33			
	40.90	1598	34.23	25475	2.58			
	47.90	1364	29.23	24440	2.79			
	54.86	1191	25.52	23710	3.14			
	64.24	1017	21.79	22700	3.39			
	106.95	611	13.09	19595	4.26			
	57.37	1174	24.40	23420	3.23	MH107		161
	64.32	1047	21.77	22735	3.49	MV107	132M	176
	97.38	692	14.38	20270	4.47	MW107		176
	134.06	502	10.44	18535	5.69			
	18.02	3626	77.70	18100	0.83			
	19.32	3382	72.46	18100	0.89			
	20.99	3113	66.71	18100	0.96			
	22.13	2953	63.27	18100	1.02	LH97		104
	23.52	2778	59.52	18100	1.08	LV97	132M	112
	27.40	2385	51.10	18100	1.26	LW97		103
	31.41	2080	44.57	18100	1.37			
	37.00	1766	37.84	18100	1.56			
	48.30	1353	28.98	18100	1.87			
	55.32	1181	25.31	17900	2.04			
	42.42	1588	33.00	18100	1.75			
	48.11	1400	29.10	18100	1.94			
	65.94	1021	21.23	17600	2.51			
	82.56	816	16.96	16700	3.12	LH97		101
	103.28	652	13.56	15700	3.64	LV97	132M	108
	140.00	481	10.00	14460	4.46	LW97		99
	164.86	409	8.49	13590	4.08			
	206.41	326	6.78	12760	4.74			
	258.20	261	5.42	11970	5.50			
	69.79	936	20.06	11955	0.87	LH87		71
						LV87	132M	76
						LW87		70
	61.34	1098	22.83	12570	0.92			
	70.59	954	19.83	12245	1.01			
	79.95	843	17.51	11945	1.10			
	91.56	736	15.29	11600	1.21			
	107.86	625	12.98	11180	1.35	LH87		69

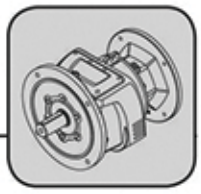

1400 Input Rpm

Pm [kW]	na [1/min]	Ma [Nm]	i	FRa [N]	fs			m [kg]
7.5	123.53	545	11.33	10825	1.47	LV87	132M	73
(10HP)	131.30	513	10.66	10665	1.53	LW87		67
	152.94	440	9.15	10260	1.70			
	206.60	326	6.78	9340	1.74			
	243.37	277	5.75	8940	1.94			
	296.26	227	4.73	8475	2.21			
	345.10	195	4.06	8120	2.45			
	219.44	315	6.38	8960	1.31			
	254.55	275	5.50	8640	1.58	XH107	132M	77
	285.71	245	4.90	8400	2.82			
	338.98	205	4.13	8040	3.88			
	247.79	280	5.65	7720	1.34			
	282.26	246	4.96	7110	1.63			
	316.74	219	4.42	6910	2.39	XH97	132M	56
	367.45	189	3.81	6950	2.78			
	402.30	173	3.48	6510	3.04			
	456.03	152	3.07	6560	3.45			
	316.03	220	4.43	2670	1.32			
	371.35	187	3.77	3230	1.63			
	395.48	176	3.54	3080	1.71			
	438.87	158	3.19	3140	1.80			
	494.70	140	2.83	3200	1.90	XH87	132M	42
	555.56	125	2.52	3230	2.01			
	619.47	112	2.26	3240	2.11			
	654.21	106	2.14	3240	2.16			
	686.27	101	2.04	3360	2.32			
	838.32	83	1.67	3195	2.38			
9.2	3.70	20386	378	88200	0.88	MH167 R97		615
(12.4HP)	4.26	17687	328	88200	1.02	MV167 R97	132M	613
	4.87	15474	287	88200	1.16			
	4.87	15470	287	62700	0.84			
	5.72	13195	245	62700	0.99	MH147 R87		391
	6.59	11449	213	62700	1.14	MV147 R87	132M	382
	7.67	9829	182	62700	1.32	MW147 R87		367
	8.28	9111	169	62700	1.43			
	16.19	4952	86.50	28125	0.87			
	17.51	4577	79.95	27980	0.94			
	20.51	3908	68.27	27330	1.10			
	22.26	3601	62.90	27310	1.19			
	26.07	3075	53.71	26525	1.40			
	26.41	3034	53.00	26840	1.42	MH107		167
	31.46	2548	44.50	25900	1.69	MV107	132M	182
	35.43	2262	39.52	25465	1.90	MW107		182
	40.90	1960	34.23	24615	2.11			
	47.90	1673	29.23	23690	2.27			
	54.86	1461	25.52	23070	2.56			
	64.24	1248	21.79	22135	2.76			
	106.95	749	13.09	19225	3.47			
	57.37	1440	24.40	22810	2.63	MH107		161
	64.32	1285	21.77	22190	2.84	MV107	132M	176
	97.38	848	14.38	19900	3.64	MW107		176
	134.06	616	10.44	18270	4.64			
	22.13	3622	63.27	18100	0.83			
	23.52	3408	59.52	18100	0.88			
	27.40	2925	51.10	18100	1.03	LH97		104
	31.41	2551	44.57	18100	1.12	LV97	132M	112
	37.00	2166	37.84	18100	1.27	LW97		103
	48.30	1659	28.98	17500	1.52			

1400 Input Rpm

Pm [kW]	na [1/min]	Ma [Nm]	i	FRa [N]	fs			m [kg]
9.2	55.32	1449	25.31	17100	1.67			
(12.4HP)	42.42	1948	33.00	18100	1.43			
	48.11	1717	29.10	18100	1.58			
	65.94	1253	21.23	17100	2.05			
	82.56	1001	16.96	16200	2.54	LH97		101
	103.28	800	13.56	15400	2.97	LV97	132M	108
	140.00	590	10.00	14200	3.64	LW97		99
	164.86	501	8.49	13330	3.33			
	206.41	400	6.78	12550	3.87			
	258.20	320	5.42	11800	4.49			
	350.00	236	4.00	10810	5.50			
	70.59	1171	19.83	11665	0.83			
	79.95	1034	17.51	11435	0.90			
	91.56	902	15.29	11155	0.98			
	107.86	766	12.98	10800	1.10			
	123.53	669	11.33	10490	1.20	LH87		69
	131.30	629	10.66	10350	1.25	LV87	132M	73
	152.94	540	9.15	9995	1.39	LW87		67
	206.60	400	6.78	9110	1.42			
	243.37	340	5.75	8745	1.58			
	296.26	279	4.73	8315	1.81			
	345.10	239	4.06	7980	2.00			
	254.55	335	5.50	8370	1.29			
	285.71	300	4.90	8150	2.30	XH107	132M	77
	338.98	250	4.13	7830	3.16			
	415.43	205	3.37	7440	3.83			
	316.74	269	4.42	6680	1.95			
	367.45	232	3.81	6810	2.26			
	402.30	212	3.48	6330	2.48			
	456.03	187	3.07	6450	2.81			
	522.39	163	2.68	5930	3.22	XH97	132M	56
	603.45	141	2.32	5710	3.47			
	622.22	137	2.25	5720	3.40			
	660.38	129	2.12	5570	3.60			
	740.74	115	1.89	5400	3.80			
	818.71	104	1.71	5400	4.36			
	395.48	215	3.54	2260	1.39			
	438.87	194	3.19	2380	1.46			
	494.70	172	2.83	2510	1.55			
	555.56	153	2.52	2600	1.64	XH87	132M	42
	619.47	138	2.26	2660	1.72			
	654.21	130	2.14	2685	1.76			
	686.27	124	2.04	2850	1.89			
	838.32	102	1.67	2730	1.94			
11	3.97	22738	353	88200	0.79			
(15HP)	4.81	18739	291	88200	0.96			
	5.14	17539	272	88200	1.03	MH167 R107	160M	643
	6.33	14253	221	88200	1.26	MV167 R107		641
	7.10	12704	197	88200	1.42			
	8.85	10193	158	88200	1.77			
	4.90	18982	286	88200	0.95	MH167 R107		602
	6.74	13788	208	88200	1.31	MV167 R107	160M	600
	8.50	10932	165	88200	1.65			
	4.26	21148	328	88200	0.85	MH167 R97		626
	4.87	18501	287	88200	0.97	MV167 R97	160M	624
	5.72	1610	245	62700	0.82	MH147 R87		402
	6.59	1397	213	62700	0.95	MV147 R87	160M	393
	7.67	1199	182	62700	1.11	MW147 R87		378

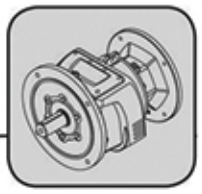

1400 Input Rpm

Pm [kW]	na [1/min]	Ma [Nm]	i	FRa [N]	fs			m [kg]
11	8.28	1112	169	62700	1.19			
(15HP)	7.86	12196	178.17	88200	1.48			
	8.26	11596	169.42	88200	1.55			
	8.84	10840	158.37	88200	1.66			
	10.03	9555	139.60	88200	1.88			
	11.52	8321	121.56	88200	2.16	MH167		604
	12.74	7522	109.89	88200	2.39	MV167	160M	613
	13.77	6957	101.64	88200	2.59			
	15.88	6035	88.17	88200	2.98			
	17.37	5516	80.58	88200	3.26			
	20.06	4778	69.80	84600	3.77			
	23.12	4145	60.56	81100	4.34			
	25.96	3691	53.92	77900	4.88			
	28.85	3321	48.52	75500	5.42			
	11.94	8028	117.29	62700	1.62			
	12.84	7463	109.03	62700	1.74			
	14.08	6807	99.44	62700	1.91			
	15.58	6151	89.86	62700	2.11			
	16.81	5702	83.30	62700	2.28			
	19.77	4846	70.80	62700	2.68	MH147		399
	23.18	4133	60.38	62700	3.15	MV147	160M	394
	27.73	3456	50.49	62700	3.76	MW147		394
	31.13	3079	44.98	62700	4.06			
	33.58	2854	41.70	62700	4.27			
	39.51	2426	35.44	62700	4.76			
	46.32	2069	30.23	60015	5.29			
	55.39	1730	25.27	56835	5.96			
	11.94	8030	117.25	42700	0.87			
	12.99	7380	107.80	42200	0.95			
	14.05	6820	99.66	41900	1.03			
	15.28	6270	91.63	41300	1.12			
	17.71	5410	79.05	40300	1.29			
	19.90	4820	70.35	39600	1.45			
	23.67	4050	59.14	38300	1.73	MH137		273
	25.75	3720	54.38	37600	1.88	MV137	160M	307
	27.93	3430	50.13	36700	2.04	MW137		307
	31.47	3050	44.49	36000	2.30			
	32.37	2960	43.25	35500	2.36			
	39.56	2420	35.39	33900	2.89			
	42.67	2250	32.81	33300	3.12			
	57.76	1660	24.24	30400	3.77			
	67.71	1420	20.68	29200	4.19			
	95.92	1000	14.60	26600	5.29			
	59.70	1650	23.45	30600	1.68			
	64.94	1520	21.56	29900	1.89	MH137		262
	81.63	1210	17.15	28000	2.29	MV137	160M	297
	93.61	1060	14.96	27000	4.11	MW137		297
	101.82	970	13.75	26300	4.38			
	20.51	4673	68.27	25475	0.92			
	22.26	4305	62.90	25640	1.00			
	26.07	3676	53.71	25065	1.17			
	26.41	3628	53.00	25465	1.19			
	31.46	3046	44.50	24720	1.41	MH107		177
	35.43	2705	39.52	24445	1.59	MV107	160M	192
	40.90	2343	34.23	23710	1.76	MW107		192
	47.90	2001	29.23	22895	1.90			
	54.86	1747	25.52	22390	2.14			
	64.24	1492	21.79	21540	2.31			

1400 Input Rpm

Pm [kW]	na [1/min]	Ma [Nm]	i	FRa [N]	fs			m [kg]
11	106.95	896	13.09	18825	2.90			
(15HP)	57.37	1722	24.40	22155	2.20			
	64.32	1536	21.77	21610	2.38	MH107		171
	97.38	1015	14.38	19505	3.05	MV107	160M	186
	134.06	737	10.44	17995	3.88	MW107		186
	311.32	317	4.50	14020	5.74			
	27.40	3498	51.10	18100	0.86			
	31.41	3051	44.57	16900	0.93	LH97		116
	37.00	2590	37.84	16900	1.07	LV97	160M	123
	48.30	1984	28.98	16500	1.27	LW97		114
	55.32	1732	25.31	16300	1.39			
	42.42	2329	33.00	17700	1.20			
	48.11	2053	29.10	17400	1.32			
	65.94	1498	21.23	16500	1.71			
	82.56	1197	16.96	15800	2.13	LH97		112
	103.28	957	13.56	15000	2.48	LV97	160M	119
	140.00	706	10.00	13930	3.04	LW97		110
	164.86	599	8.49	13050	2.78			
	206.41	479	6.78	12330	3.23			
	258.20	383	5.42	11620	3.75			
	350.00	282	4.00	10680	4.60			
	91.56	1079	15.29	10680	0.82			
	107.86	916	12.98	10395	0.92			
	123.53	800	11.33	10140	1.00			
	131.30	752	10.66	10020	1.05	LH87		81
	152.94	646	9.15	9710	1.16	LV87	160M	85
	206.60	478	6.78	8865	1.19	LW87		79
	243.37	406	5.75	8540	1.32			
	296.26	333	4.73	8145	1.51			
	345.10	286	4.06	7835	1.67			
	254.55	400	5.50	8080	1.08			
	285.71	355	4.90	7890	1.92			
	338.98	300	4.13	7610	2.65	XH107	160M	89
	415.43	245	3.37	7250	3.21			
	448.72	225	3.12	7250	3.56			
	608.70	165	2.30	6680	4.21			
	316.74	322	4.42	6440	1.63			
	367.45	277	3.81	6670	1.89			
	402.30	253	3.48	6130	2.07			
	456.03	223	3.07	6330	2.35			
	522.39	195	2.68	5770	2.69	XH97	160M	67
	603.45	169	2.32	5570	2.90			
	622.22	164	2.25	5600	2.84			
	660.38	154	2.12	5450	3.01			
	740.74	137	1.89	5290	3.18			
	818.71	124	1.71	5330	3.65			
	395.48	258	3.54	1380	1.17			
	438.87	232	3.19	1580	1.22			
	494.70	206	2.83	1780	1.30			
	555.56	183	2.52	1940	1.37	XH87	160M	54
	619.47	164	2.26	2050	1.44			
	654.21	156	2.14	2100	1.47			
	686.27	148	2.04	2315	1.58			
	838.32	121	1.67	2240	1.62			
15	6.33	19436	221	88200	0.93	MH167 R107		643
(20HP)	7.10	17324	197	88200	1.04	MV167 R107	160L	641
	8.85	13899	158	88200	1.30			
	5.64	22488	248	88200	0.80	MH167 R107		602

1400 Input Rpm

Pm [kW]	na [1/min]	Ma [Nm]	i	FRa [N]	fs			m [kg]
15	6.74	18801	208.00	88200	0.96	MV167 R107	160L	600
(20HP)	7.86	16630	178.17	88200	1.08			
	8.26	15813	169.42	88200	1.14			
	8.84	14782	158.37	88200	1.22			
	10.03	13030	139.60	88200	1.38			
	11.52	11347	121.56	88200	1.59			
	12.74	10257	109.89	88200	1.75			
	13.77	9487	101.64	88200	1.90	MH167	160L	604
	15.88	8229	88.17	88200	2.19	MV167		613
	17.37	7521	80.58	86300	2.39			
	20.06	6515	69.80	82900	2.76			
	23.12	5653	60.56	79600	3.18			
	25.96	5033	53.92	76400	3.58			
	28.85	4529	48.52	74100	3.97			
	31.92	4094	43.86	72000	4.40			
	39.78	3285	35.19	67500	5.48			
	11.94	10947	117.29	62700	1.19			
	12.84	10176	109.03	62700	1.28			
	14.08	9282	99.44	62700	1.40			
	15.58	8387	89.86	62700	1.55			
	16.81	7775	83.30	62700	1.67			
	19.77	6608	70.80	62700	1.97	MH147		399
	23.18	5636	60.38	62700	2.31	MV147	160L	394
	27.73	4713	50.49	62700	2.76	MW147		394
	31.13	4198	44.98	62700	2.98			
	33.58	3892	41.70	62700	3.13			
	39.51	3308	35.44	61735	3.49			
	46.32	2821	30.23	58980	3.88			
	55.39	2359	25.27	55980	4.37			
	70.03	1866	19.99	52200	5.11			
	89.65	1503	15.62	48370	5.85	MH147		386
						MV147	160L	381
						MW147		381
	15.28	8550	91.63	37000	0.82			
	17.71	7380	79.05	36700	0.95			
	19.90	6570	70.35	36400	1.07			
	23.67	5520	59.14	35600	1.27			
	25.75	5080	54.38	35100	1.38			
	27.93	4680	50.13	34300	1.50	MH137		273
	31.47	4150	44.49	33900	1.69	MV137	160L	307
	32.37	4040	43.25	33400	1.73	MW137		307
	39.56	3300	35.39	32200	2.12			
	42.67	3060	32.81	31700	2.29			
	57.76	2260	24.24	29100	2.76			
	67.71	1930	20.68	28100	3.07			
	95.92	1360	14.60	25800	3.88			
	59.70	2260	23.45	29500	1.23			
	64.94	2070	21.56	28800	1.38			
	81.63	1650	17.15	27100	1.68			
	93.61	1440	14.96	26300	3.01	MH137		262
	101.82	1320	13.75	25700	3.21	MV137	160L	297
	138.34	970	10.12	23600	4.59	MW137		297
	173.91	770	8.05	22100	4.79			
	287.75	470	4.87	18900	4.84			
	346.18	390	4.04	17900	5.69			
	26.07	5013	53.71	21815	0.86			
	26.41	4947	53.00	22425	0.87			
	31.46	4154	44.50	22095	1.04			

1400 Input Rpm

Pm [kW]	na [1/min]	Ma [Nm]	i	FRa [N]	fs			m [kg]
15	35.43	3688	39.52	22175	1.17	MH107		177
(20HP)	40.90	3195	34.23	21695	1.29	MV107	160L	192
	47.90	2728	29.23	21130	1.39	MW107		192
	54.86	2382	25.52	20890	1.57			
	64.24	2034	21.79	20225	1.70			
	106.95	1222	13.09	17950	2.13			
	57.37	2348	24.40	20715	1.62			
	64.32	2094	21.77	20320	1.74	MH107		171
	97.38	1383	14.38	18635	2.23	MV107	160L	186
	134.06	1005	10.44	17375	2.84	MW107		186
	311.32	433	4.50	13710	4.21			
	349.61	385	4.00	13275	4.55			
	48.30	2705	28.98	14500	0.93	LH97		116
	55.32	2362	25.31	14500	1.02	LV97	160L	123
						LW97		114
	42.42	3175	33.00	15700	0.88			
	48.11	2800	29.10	15700	0.97			
	65.94	2043	21.23	15200	1.26			
	82.56	1632	16.96	14700	1.56	LH97		112
	103.28	1304	13.56	14200	1.82	LV97	160L	119
	140.00	962	10.00	13330	2.23	LW97		110
	164.86	817	8.49	12420	2.04			
	206.41	653	6.78	11830	2.37			
	258.20	522	5.42	11220	2.75			
	350.00	385	4.00	10380	3.37			
	285.71	485	4.90	7310	1.41			
	338.98	410	4.13	7110	1.94			
	415.43	335	3.37	6840	2.35			
	448.72	310	3.12	6920	2.61	XH107	160L	89
	608.70	230	2.30	6425	3.09			
	732.98	190	1.91	6125	3.33			
	1007.19	140	1.39	5605	3.70			
	316.74	438	4.42	5250	1.20			
	367.45	378	3.81	6350	1.39			
	402.30	345	3.48	5670	1.52			
	456.03	305	3.07	6080	1.72			
	522.39	266	2.68	5430	1.97	XH97	160L	67
	603.45	230	2.32	5270	2.13			
	622.22	223	2.25	5340	2.08			
	660.38	210	2.12	5170	2.21			
	740.74	187	1.89	5040	2.33			
	818.71	170	1.71	5170	2.67			
	494.70	281	2.83	150	0.95			
	555.56	250	2.52	450	1.00			
	619.47	224	2.26	690	1.05	XH87	160L	54
	654.21	212	2.14	795	1.08			
	686.27	202	2.04	1120	1.16			
	838.32	166	1.67	1150	1.19			
18.5	7.86	20511	178.17	88200	0.88			
(25HP)	8.26	19503	169.42	88200	0.92			
	8.84	18232	158.37	88200	0.99			
	10.03	16070	139.60	88200	1.12			
	11.52	13994	121.56	88200	1.29			
	12.74	12650	109.89	88200	1.42			
	13.77	11700	101.64	88200	1.54			
	15.88	10150	88.17	86500	1.77	MH167	180M	611
	17.37	9277	80.58	84500	1.94	MV167		632
	20.06	8035	69.80	81400	2.24			

1400 Input Rpm

Pm [kW]	na [1/min]	Ma [Nm]	i	FRa [N]	fs			m [kg]
18.5 (25HP)	23.12	6971	60.56	78300	2.58			
	25.96	6207	53.92	75000	2.90			
	28.85	5586	48.52	72900	3.22			
	31.92	5050	43.86	70900	3.56			
	39.78	4051	35.19	66600	4.44			
	50.25	3207	27.86	62200	5.27			
	11.94	13502	117.29	62700	0.96			
	12.84	12551	109.03	62700	1.04			
	14.08	11448	99.44	62700	1.14			
	15.58	10344	89.86	62700	1.26			
	16.81	9589	83.30	62700	1.36			
	19.77	8150	70.80	62700	1.60	MH147		407
	23.18	6951	60.38	62700	1.87	MV147	180M	403
	27.73	5812	50.49	62700	2.24	MW147		403
	31.13	5178	44.98	62700	2.41			
	33.58	4800	41.70	62700	2.54			
	39.51	4080	35.44	60680	2.83			
	46.32	3480	30.23	58075	3.15			
	55.39	2910	25.27	55220	3.55			
	70.03	2301	19.99	51600	4.15			
	89.65	1853	15.62	47890	4.74	MH147		395
	105.11	1581	13.32	45665	5.27	MV147	180M	390
						MW147		390
	19.90	8100	70.35	33600	0.86			
	23.67	6810	59.14	33200	1.03			
	25.75	6260	54.38	32800	1.12			
	27.93	5770	50.13	32200	1.21			
	31.47	5120	44.49	32100	1.37	MH137		282
	32.37	4980	43.25	31600	1.41	MV137	180M	316
	39.56	4070	35.39	30700	1.72	MW137		316
	42.67	3780	32.81	30300	1.85			
	57.76	2790	24.24	28000	2.24			
	67.71	2380	20.68	27100	2.49			
	95.92	1680	14.60	25100	3.14			
	59.70	2780	23.45	28500	1.00			
	64.94	2560	21.56	27900	1.12			
	81.63	2040	17.15	26400	1.36			
	93.61	1770	14.96	25700	2.44	MH137		271
	101.82	1630	13.75	25100	2.60	MV137	180M	306
	138.34	1200	10.12	23200	3.72	MW137		306
	173.91	960	8.05	21700	3.88			
	287.75	580	4.87	18700	3.92			
	346.18	480	4.04	17700	4.62			
	31.46	5123	44.50	19805	0.84			
	35.43	4549	39.52	20190	0.95			
	40.90	3941	34.23	19930	1.05	MH107		187
	47.90	3365	29.23	19585	1.13	MV107	180M	202
	54.86	2938	25.52	19575	1.27	MW107		202
	64.24	2509	21.79	19070	1.37			
	106.95	1507	13.09	17190	1.73			
	57.37	2896	24.40	19450	1.31			
	64.32	2583	21.77	19195	1.41	MH107		181
	97.38	1706	14.38	17870	1.81	MV107	180M	196
	134.06	1239	10.44	16830	2.31	MW107		196
	311.32	534	4.50	13440	3.41			
	349.61	475	4.00	13030	3.69			
	55.32	2913	25.31	12900	0.83			
	65.94	2520	21.23	14100	1.02			

1400 Input Rpm

Pm [kW]	na [1/min]	Ma [Nm]	i	FRa [N]	fs			m [kg]
18.5	82.56	2012	16.96	13800	1.26			
(25HP)	103.28	1609	13.56	13500	1.48	LH97		119
	140.00	1187	10.00	12800	1.81	LV97	180M	128
	164.86	1008	8.49	11870	1.65	LW97		119
	206.41	805	6.78	11390	1.92			
	258.20	644	5.42	10870	2.23			
	350.00	475	4.00	10130	2.73			
	338.98	505	4.13	6550	1.57			
	415.43	410	3.37	6480	1.91			
	448.72	380	3.12	6630	2.12	XH107	180M	95
	608.70	280	2.30	6205	2.51			
	732.98	235	1.91	5935	2.70			
	1007.19	170	1.39	5460	3.00			
	367.45	466	3.81	5000	1.13			
	402.30	426	3.48	4200	1.23			
	456.03	376	3.07	5360	1.40			
	522.39	328	2.68	4640	1.60			
	603.45	284	2.32	4840	1.73	XH97	180M	74
	622.22	275	2.25	4670	1.69			
	660.38	259	2.12	4900	1.79			
	740.74	231	1.89	4820	1.89			
	818.71	209	1.71	5020	2.17			
22	8.84	21681	158.37	88200	0.83			
(30HP)	10.03	19110	139.60	88200	0.94			
	11.52	16642	121.56	88200	1.08			
	12.74	15043	109.89	88200	1.20			
	13.77	13914	101.64	87400	1.29			
	15.88	12070	88.17	84600	1.49			
	17.37	11032	80.58	82800	1.63	MH167		611
	20.06	9555	69.80	79900	1.88	MV167	180L	632
	23.12	8290	60.56	77000	2.17			
	25.96	7382	53.92	73700	2.44			
	28.85	6643	48.52	71700	2.71			
	31.92	6005	43.86	69800	3.00			
	39.78	4818	35.19	65700	3.74			
	50.25	3814	27.86	61500	4.43			
	66.06	2901	21.19	56800	5.31			
	58.86	3357	23.78	59100	5.36	MH167	180L	589
						MV167		606
	11.94	16056	117.29	62700	0.81			
	12.84	14925	109.03	62700	0.87			
	14.08	13613	99.44	62700	0.95			
	15.58	12301	89.86	62700	1.06			
	16.81	11403	83.30	62700	1.14			
	19.77	9692	70.80	62700	1.34	MH147		407
	23.18	8266	60.38	62700	1.57	MV147	180L	403
	27.73	6912	50.49	62700	1.88	MW147		403
	31.13	6158	44.98	62700	2.03			
	33.58	5708	41.70	62135	2.14			
	39.51	4851	35.44	59625	2.38			
	46.32	4138	30.23	57175	2.65			
	55.39	3460	25.27	54465	2.98			
	70.03	2737	19.99	51005	3.49			
	89.65	2204	15.62	47410	3.99	MH147		395
	105.11	1880	13.32	45250	4.43	MV147	180L	390
	136.75	1445	10.24	41790	5.16	MW147		390
	23.67	8100	59.14	30900	0.86			
	25.75	7440	54.38	30600	0.94			

1400 Input Rpm

Pm [kW]	na [1/min]	Ma [Nm]	i	FRa [N]	fs			m [kg]
22	27.93	6860	50.13	30100	1.02			
(30HP)	31.47	6090	44.49	30300	1.15	MH137		282
	32.37	5920	43.25	29800	1.18	MV137	180L	316
	39.56	4840	35.39	29200	1.44	MW137		316
	42.67	4490	32.81	28900	1.56			
	57.76	3320	24.24	26800	1.88			
	67.71	2830	20.68	26100	2.10			
	95.92	2000	14.60	24400	2.64			
	59.70	3310	23.45	27500	0.84			
	64.94	3040	21.56	27000	0.94			
	81.63	2420	17.15	25600	1.14			
	93.61	2110	14.96	25100	2.05	MH137		271
	101.82	1940	13.75	24500	2.19	MV137	180L	306
	138.34	1430	10.12	22800	3.13	MW137		306
	173.91	1140	8.05	21400	3.27			
	287.75	690	4.87	18400	3.30			
	346.18	570	4.04	17500	3.88			
	35.43	5410	39.52	18200	0.79			
	40.90	4686	34.23	18165	0.88	MH107		187
	47.90	4002	29.23	18035	0.95	MV107	180L	202
	54.86	3494	25.52	18255	1.07	MW107		202
	64.24	2983	21.79	17920	1.16			
	106.95	1792	13.09	16420	1.45			
	57.37	3444	24.40	18185	1.10			
	64.32	3072	21.77	18065	1.19	MH107		181
	97.38	2029	14.38	17105	1.52	MV107	180L	196
	134.06	1474	10.44	16290	1.94	MW107		196
	311.32	635	4.50	13165	2.87			
	349.61	565	4.00	12790	3.10			
	65.94	2996	21.23	13000	0.86	LH97		119
	82.56	2393	16.96	13000	1.06	LV97	180L	128
	103.28	1913	13.56	12700	1.24	LW97		119
	140.00	1411	10.00	12270	1.52			
	164.86	1199	8.49	11330	1.39	LH97		119
	206.41	957	6.78	10950	1.62	LV97	180L	128
	258.20	765	5.42	10520	1.88	LW97		119
	350.00	565	4.00	9870	2.30			
	338.98	600	4.13	5200	1.32			
	415.43	490	3.37	5650	1.60			
	448.72	455	3.12	6180	1.78	XH107	180L	95
	608.70	335	2.30	5985	2.11			
	732.98	280	1.91	5745	2.27			
	1007.19	200	1.39	5315	2.52			
	367.45	554	3.81	3610	0.95			
	402.30	506	3.48	2720	1.04			
	456.03	447	3.07	4200	1.18			
	522.39	390	2.68	3430	1.35			
	603.45	338	2.32	3770	1.45	XH97	180L	74
	622.22	327	2.25	3590	1.42			
	660.38	308	2.12	3900	1.51			
	740.74	275	1.89	4070	1.59			
	818.71	249	1.71	4650	1.82			
30	11.52	22693	121.56	84900	0.79			
(40HP)	12.74	20514	109.89	83500	0.88			
	13.77	18973	101.64	82400	0.95			
	15.88	16459	88.17	80200	1.09			
	17.37	15043	80.58	78800	1.20			
	20.06	13030	69.80	76400	1.38	MH167	200L	611

1400 Input Rpm

Pm [kW]	na [1/min]	Ma [Nm]	i	FRa [N]	fs			m [kg]
30 (40HP)	23.12	11305	60.56	74000	1.59	MV167		632
	25.96	10066	53.92	70700	1.79			
	28.85	9058	48.52	69000	1.99			
	31.92	8189	43.86	67300	2.20			
	39.78	6570	35.19	63700	2.74			
	50.25	5201	27.86	60000	3.25			
	66.06	3956	21.19	55600	3.89			
	58.86	4577	23.78	57900	3.93	MH167		589
	70.40	3827	19.89	55000	4.55	MV167	200L	606
	88.80	3034	15.77	51400	5.31			
	102.52	2628	13.66	49300	5.86			
	16.81	15550	83.30	62700	0.84			
	19.77	13216	70.80	62700	0.98			
	23.18	11272	60.38	62700	1.15			
	27.73	9426	50.49	61645	1.38	MH147		407
	31.13	8397	44.98	60235	1.49	MV147	200L	403
	33.58	7784	41.70	59285	1.57	MW147		403
	39.51	6616	35.44	57205	1.75			
	46.32	5643	30.23	55105	1.94			
	55.39	4718	25.27	52740	2.19			
	70.03	3732	19.99	49645	2.56			
	89.65	3005	15.62	46315	2.92	MH147		395
	105.11	2563	13.32	44315	3.25	MV147	200L	390
	136.75	1970	10.24	41055	3.79	MW147		390
	31.47	8310	44.49	26100	0.84			
	32.37	8070	43.25	25600	0.87			
	39.56	6610	35.39	25800	1.06	MH137		282
	42.67	6130	32.81	25800	1.14	MV137	200L	316
	57.76	4520	24.24	24200	1.38	MW137		316
	67.71	3860	20.68	23900	1.54			
	95.92	2720	14.60	22800	1.94			
	81.63	3300	17.15	23900	0.84			
	93.61	2880	14.96	23600	1.51			
	101.82	2650	13.75	23200	1.60	MH137		271
	138.34	1950	10.12	21800	2.30	MV137	200L	305
	173.91	1550	8.05	20600	2.39	MW137		305
	287.75	940	4.87	17900	2.42			
	346.18	780	4.04	17000	2.85			
	64.24	4068	21.79	15285	0.85	MH107		187
	106.95	2444	13.09	14670	1.06	MV107	200L	202
						MW107		202
	57.37	4696	24.40	15295	0.81			
	64.32	4189	21.77	15490	0.87	MH107		181
	97.38	2767	14.38	15360	1.12	MV107	200L	196
	134.06	2010	10.44	15055	1.42	MW107		196
	311.32	865	4.50	12550	2.11			
	349.61	771	4.00	12240	2.27			
	415.43	670	3.37	3050	1.18			
	448.72	620	3.12	3880	1.30			
	608.70	455	2.30	4500	1.54	XH107	200L	95
	732.98	380	1.91	4695	1.66			
	1007.19	275	1.39	4740	1.85			
	456.03	609	3.07	1540	0.86			
	522.39	532	2.68	680	0.99			
	603.45	460	2.32	1340	1.06	XH97	200L	76
	622.22	446	2.25	1130	1.04			
	660.38	421	2.12	1630	1.11			
	740.74	375	1.89	2000	1.17			

1400 Input Rpm

Pm [kW]	na [1/min]	Ma [Nm]	i	FRa [N]	fs			m [kg]
	818.71	339	1.71	2890	1.34			
37	15.88	20299	88.17	76400	0.89			
(50HP)	17.37	18553	80.58	75300	0.97			
	20.06	16070	69.80	73400	1.12			
	23.12	13943	60.56	71400	1.29	MH167	225S	620
	25.96	12414	53.92	68000	1.45	MV167		643
	28.85	11172	48.52	66600	1.61			
	31.92	10099	43.86	65200	1.78			
	39.78	8103	35.19	62000	2.22			
	50.25	6415	27.86	58600	2.63			
	66.06	4879	21.19	54600	3.16			
	58.86	5645	23.78	56800	3.19			
	70.40	4720	19.89	54100	3.69	MH167		598
	88.80	3742	15.77	50700	4.30	MV167	225S	617
	102.52	3241	13.66	48700	4.75			
	134.78	2465	10.39	44900	5.68			
	19.77	16300	70.80	61110	0.80			
	23.18	13903	60.38	60090	0.94			
	27.73	11625	50.49	58630	1.12			
	31.13	10356	44.98	57555	1.21	MH147		416
	33.58	9600	41.70	56800	1.27	MV147	225S	429
	39.51	8159	35.44	55085	1.42	MW147		429
	46.32	6959	30.23	53300	1.57			
	55.39	5819	25.27	51235	1.77			
	70.03	4603	19.99	48450	2.07			
	89.65	3707	15.62	45350	2.37			
	105.11	3162	13.32	43490	2.64	MH147		404
	136.75	2430	10.24	40410	3.07	MV147	225S	416
	280.00	1187	5.00	32840	4.95	MW147		416
	336.78	987	4.16	31060	5.60			
	39.56	8150	35.39	22800	0.86			
	42.67	7550	32.81	23000	0.93	MH137		290
	57.76	5580	24.24	22000	1.12	MV137	225S	342
	67.71	4760	20.68	22000	1.25	MW137		342
	95.92	3360	14.60	21500	1.57			
	93.61	3550	14.96	22400	1.22			
	101.82	3260	13.75	22100	1.30	MH137		279
	138.34	2400	10.12	20900	1.86	MV137	225S	332
	173.91	1910	8.05	19900	1.94	MW137		332
	287.75	1150	4.87	17400	1.96			
	346.18	960	4.04	16700	2.31			
	106.95	3014	13.09	13140	0.86			
	97.38	3412	14.38	13830	0.91	MH107		188
	134.06	2479	10.44	13970	1.15	MV107	225S	191
	311.32	1067	4.50	12005	1.71	MW107		191
	349.61	950	4.00	11755	1.84			
	415.43	825	3.37	770	0.95			
	448.72	765	3.12	1870	1.06			
	608.70	565	2.30	2920	1.25	XH107	225S	104
	732.98	465	1.91	3315	1.35			
	1007.19	340	1.39	3625	1.50			
45	17.37	22564	80.58	71300	0.80			
(60HP)	20.06	19545	69.80	69900	0.92			
	23.12	16958	60.56	68300	1.06			
	25.96	15099	53.92	65000	1.19	MH167		620
	28.85	13588	48.52	63900	1.32	MV167	225M	643
	31.92	12283	43.86	62700	1.47			
	39.78	9855	35.19	60000	1.83			

1400 Input Rpm

Pm [kW]	na [1/min]	Ma [Nm]	i	FRa [N]	fs			m [kg]
45	50.25	7802	27.86	57000	2.17			
(60HP)	66.06	5934	21.19	53400	2.60			
	58.86	6866	23.78	55600	2.62			
	70.40	5740	19.89	53100	3.03	MH167		598
	88.80	4551	15.77	49900	3.54	MV167	225M	617
	102.52	3942	13.66	48000	3.91			
	134.78	2999	10.39	44400	4.67			
	27.73	14138	50.49	55185	0.92			
	31.13	12595	44.98	54480	0.99			
	33.58	11675	41.70	53950	1.04	MH147		416
	39.51	9923	35.44	52660	1.16	MV147	225M	429
	46.32	8464	30.23	51240	1.29	MW147		429
	55.39	7077	25.27	49505	1.46			
	70.03	5598	19.99	47085	1.70			
	89.65	4508	15.62	44245	1.95			
	105.11	3845	13.32	42555	2.17	MH147		404
	136.75	2955	10.24	39675	2.52	MV147	225M	416
	280.00	1443	5.00	32485	4.07	MW147		416
	336.78	1200	4.16	30760	4.61			
	57.76	6790	24.24	19400	0.92	MH137		290
	67.71	5790	20.68	19800	1.02	MV137	225M	342
	95.92	4090	14.60	19900	1.29	MW137		342
	93.61	4320	14.96	21000	1.00			
	101.82	3970	13.75	20700	1.07	MH137		279
	138.34	2920	10.12	20000	1.53	MV137	225M	332
	173.91	2320	8.05	19100	1.60	MW137		332
	287.75	1400	4.87	16900	1.61			
	346.18	1170	4.04	16200	1.90			
	134.06	3015	10.44	12735	0.95	MH107		188
	311.32	1298	4.50	11385	1.40	MV107	225M	191
	349.61	1156	4.00	11205	1.52	MW107		191
55	23.12	20726	60.56	64600	0.87			
(75HP)	25.96	18454	53.92	61200	0.98			
	28.85	16607	48.52	60400	1.08	MH167		639
	31.92	15012	43.86	59600	1.20	MV167	250M	662
	39.78	12045	35.19	57600	1.49			
	50.25	9535	27.86	55100	1.77			
	66.06	7253	21.19	51900	2.12			
	58.86	8392	23.78	54100	2.14			
	70.40	7016	19.89	51800	2.48			
	88.80	5563	15.77	48900	2.89	MH167		617
	102.52	4818	13.66	47100	3.20	MV167	250M	637
	134.78	3665	10.39	43700	3.82			
	274.68	1798	5.10	35300	5.34			
	355.97	1388	3.93	32700	5.48			
	31.13	15394	44.98	50640	0.81			
	33.58	14270	41.70	50395	0.85	MH147		434
	39.51	12129	35.44	49645	0.95	MV147	250M	444
	46.32	10345	30.23	48665	1.06	MW147		444
	55.39	8650	25.27	47345	1.19			
	70.03	6842	19.99	45370	1.39			
	89.65	5510	15.62	42875	1.59			
	105.11	4700	13.32	41385	1.77	MH147		421
	136.75	3612	10.24	38750	2.07	MV147	250M	431
	280.00	1764	5.00	32030	3.33	MW147		431
	336.78	1467	4.16	30390	3.77			
	67.71	7080	20.68	17000	0.84			
	95.92	5000	14.60	17900	1.06			

1400 Input Rpm

Pm [kW]	na [1/min]	Ma [Nm]	i	FRa [N]	fs			m [kg]
55	93.61	5280	14.96	19200	0.82	MH137		297
(75HP)	101.82	4850	13.75	19100	0.88	MV137	250M	297
	138.34	3570	10.12	18800	1.25	MW137		297
	173.91	2840	8.05	18100	1.31			
	287.75	1720	4.87	16200	1.32			
	346.18	1430	4.04	15600	1.55			
75	28.85	22646	48.52	53600	0.79			
(100HP)	31.92	20471	43.86	53500	0.88	MH167		650
	39.78	16425	35.19	52600	1.10	MV167	280S	674
	50.25	13003	27.86	51100	1.30			
	66.06	9890	21.19	48900	1.56			
	58.86	11443	23.78	51000	1.57			
	70.40	9567	19.89	49300	1.82			
	88.80	7586	15.77	46900	2.12	MH167		629
	102.52	6570	13.66	45300	2.34	MV167	280S	649
	134.78	4998	10.39	42400	2.80			
	274.68	2452	5.10	34600	3.91			
	355.97	1892	3.93	32100	4.02			
	55.39	11795	25.27	43030	0.87	MH147		449
	70.03	9330	19.99	41965	1.02	MV147	280S	299
						MW147		299
	89.65	7514	15.62	40130	1.17			
	105.11	6409	13.32	39035	1.30	MH147		436
	136.75	4926	10.24	36915	1.51	MV147	280S	285
	280.00	2406	5.00	31135	2.44	MW147		285
	336.78	2000	4.16	29645	2.76			
90	39.78	19710	35.19	48900	0.91	MH167		650
(125HP)	50.25	15603	27.86	48200	1.08	MV167	280M	671
	66.06	11868	21.19	46700	1.30			
	58.86	13732	23.78	48700	1.31			
	70.40	11481	19.89	47400	1.52			
	88.80	9103	15.77	45400	1.77	MH167		629
	102.52	7885	13.66	44000	1.95	MV167	280M	649
	134.78	5997	10.39	41400	2.33			
	274.68	2943	5.10	34000	3.26			
	355.97	2271	3.93	31700	3.35			
	70.03	11196	19.99	39400	0.85	MH147		449
						MV147	280M	299
						MW147		299
	89.65	9016	15.62	38070	0.97			
	105.11	7690	13.32	37280	1.08	MH147		436
	136.75	5911	10.24	35535	1.26	MV147	280M	285
	280.00	2887	5.00	30460	2.04	MW147		285
	336.78	2400	4.16	29085	2.30			
110	50.25	19071	27.86	44300	0.89	MH167	315S	672
(150HP)	66.06	14506	21.19	43700	1.06	MV167		687
	58.86	16783	23.78	45700	1.07			
	70.40	14032	19.89	44800	1.24			
	88.80	11125	15.77	43300	1.45	MH167		650
	102.52	9637	13.66	42300	1.60	MV167	315S	662
	134.78	7330	10.39	40100	1.91			
	274.68	3597	5.10	33300	2.67			
	355.97	2775	3.93	31100	2.74			

RX..D

1400 Input Rpm

i	na [1/min]	Mamax [Nm]	Pe [kW]	FRa [N]	FRe [N]			m [kg]
RX57								65Nm
5.47	256	37	1.0	2240	720	XHD57	Ø19	9
4.88	287	38	1.2	2150	710			
4.55	308	36	1.2	720	540			
4.05	346	32	1.2	920	550			
3.63	386	65	2.7	360	510			
3.19	439	64	3.0	220	500			
3.00	467	62	3.1	215	510			
2.23	628	53	3.6	195	530			
1.59	881	43	4.1	175	520	XHD57	Ø24	12
1.31	1069	42	4.8	165	540			
RX67								96Nm
6.27	223	43	1.0	2790	930	XHD67	Ø19	12
5.47	256	43	1.2	2070	490			
4.95	283	39	1.2	1530	460			
4.53	309	36	1.2	1430	410			
3.52	398	87	3.7	570	300			
2.89	484	96	5.0	240	210			
2.72	515	89	4.9	235	260	XHD67	Ø24	14
2.35	596	82	5.3	220	280			
1.86	753	74	6.0	205	310			
1.62	864	66	6.2	195	340			
1.40	1000	59	6.6	185	350			
RX77								169Nm
8.09	173.1	56	1.1	5410	630	XHD77	Ø19	19
7.50	187	54	1.1	5290	650			
6.69	209	53	1.2	4100	510			
6.00	233	48	1.2	3920	490			
5.12	273	41	1.2	3540	480			
4.74	295	122	3.9	2160	1230	XHD77	Ø24	20
4.55	308	133	4.4	1780	1160			
4.19	334	143	5.2	1170	1070			
3.75	373	153	6.2	740	990			
3.25	431	169	7.9	390	920	XHD77	Ø38	25
2.67	524	132	7.5	360	1050			
2.38	588	135	8.6	350	1080			
2.13	657	130	9.3	335	1100			
1.96	714	115	8.9	325	1140			
1.66	843	103	9.4	310	1170			
RX87								305Nm
5.50	255	212	5.8	3620	1490	XHD87	Ø28	33
4.85	289	216	6.8	3150	1430			
4.43	316	289	9.9	1220	1240			
3.77	371	305	12.2	940	1110	XHD87	Ø38	38
3.54	395	300	12.8	500	1090			
3.19	439	284	13.5	470	1110			
2.83	495	267	14.3	450	1140			
2.52	556	251	15.1	430	2720	XHD87	Ø42	46
2.26	619	236	15.8	420	2790			
2.14	654	229	16.2	405	2820			
2.04	686	235	17.4	400	2760			
1.67	838	197	17.8	375	2970			

1400 Input Rpm

i	na [1/min]	Mamax [Nm]	Pe [kW]	FRa [N]	FRe [N]			m [kg]
RX97								525Nm
5.65	248	375	10.0	7420	1050	XHD97	Ø28	47
4.96	282	400	12.2	6390	870	XHD97	Ø38	52
4.42	317	427	14.6	3720	740			
3.81	367	525	21	4070	2290	XHD97	Ø42	60
3.48	402	525	23	2380	2180			
3.07	456	525	26	2920	2220			
2.68	522	525	30	810	2950	XHD97	Ø48	67
2.32	603	490	32	750	2980			
2.25	622	465	31	740	2970			
2.12	660	465	33	730	3000			
1.89	741	437	35	700	3030			
1.71	819	454	40	680	3050			
RX107								808Nm
6.38	219	414	9.8	8530	1050	XHD107	Ø28	70
5.50	255	430	11.8	7940	1480	XHD107	Ø38	73
4.90	286	685	21	5030	2110	XHD107	Ø42	81
4.13	339	795	29	2450	1820			
3.37	415	786	35	1330	2630	XHD107	Ø48	87
3.12	449	808	39	1260	2590			
2.30	609	705	46	810	2640			
1.91	733	630	50	780	2700			
1.39	1007	510	55	670	2780			

R..D

1400 Input Rpm

i	na [1/min]	Mamax [Nm]	Pe [kW]	FRa [N]	FRe [N]			m [kg]
R17								85Nm
79.85	18	85	0.17	1770	690			
68.70	20	85	0.20	1770	680			
59.23	24	85	0.23	1770	670			
49.90	28	85	0.27	1770	650			
45.45	31	85	0.30	1770	660	MH17	Ø16	8
39.61	35	85	0.34	1770	650	MV17		8
35.17	40	85	0.39	1770	630			
29.36	48	85	0.47	1630	610			
24.76	57	85	0.55	1480	580			
19.69	71	85	0.69	1290	530			
15.02	93	71	0.74	1270	280			
12.65	111	67	0.82	1210	280			
10.04	139	61	0.95	1130	310	MH17	Ø16	8
7.44	188	54	1.1	1030	300	MV17		8
4.99	280	47	1.5	920	290			
4.05	346	43	1.7	860	300			
R37								200Nm
138.36	10	200	0.23	4950	600			
119.28	12	200	0.27	4950	600			
100.51	14	200	0.32	4950	580			
91.53	15	200	0.35	4950	580			
79.77	18	200	0.40	4920	570	LH37		10
76.66	18	200	0.42	4840	480	LV37	Ø16	11
69.81	20	200	0.46	4660	490	LW37		11
60.84	23	200	0.53	4410	480			
54.03	26	200	0.59	4200	470			
52.24	27	200	0.62	4060	370			
44.01	32	200	0.73	3770	350			
40.08	35	200	0.80	3630	630	LH37		11
34.93	40	200	0.92	3410	630	LV37	Ø19	12
31.02	45	200	1.0	3240	610	LW37		11
25.89	54	193	1.2	2990	590			
24.50	57	189	1.2	3010	450			
22.09	63	170	1.2	2890	470			
19.95	70	154	1.2	2780	440			
17.89	78	138	1.2	2650	460			
15.75	89	189	1.9	2500	400			
13.07	107	181	2.2	2330	390	LH37		10
11.73	119	175	2.3	2250	400	LV37	Ø19	11
10.02	140	166	2.6	2130	420	LW37		11
8.50	165	157	2.9	2020	360			
6.74	208	133	3.1	1880	320			
5.75	243	126	3.4	1780	290			
4.88	287	119	3.8	1690	220			
4.00	350	112	4.4	1580	180			

1400 Input Rpm

i	na [1/min]	Mamax [Nm]	Pe [kW]	FRa [N]	FRe [N]			m [kg]
R47								300Nm
178.83	8	300	0.27	5420	700			
160.40	9	300	0.30	5420	690			
138.19	10	300	0.35	5420	690			
126.22	11	300	0.38	5420	690	LH47		17
110.34	13	300	0.44	5420	670	LV47	Ø16	17
99.46	14	300	0.48	5420	680	LW47		17
89.82	16	300	0.54	5420	660			
80.58	17	300	0.60	5420	670			
77.84	18	300	0.62	5420	580			
70.91	20	300	0.68	5420	640			
63.37	22	300	0.76	5420	790			
58.84	24	300	0.82	5420	810			
52.84	27	300	0.91	5420	810			
45.13	31	300	1.1	5420	810	LH47		17
41.51	34	300	1.2	5420	770	LV47	Ø19	18
37.28	38	278	1.2	5420	760	LW47		17
31.83	44	300	1.5	4895	740			
27.19	51	300	1.8	4570	740			
25.01	56	300	1.9	4400	660			
22.46	62	300	2.2	4195	660			
24.70	57	300	1.9	4615	590			
23.02	61	300	2.0	4480	560	LH47		17
20.49	68	300	2.3	4260	570	LV47	Ø19	17
18.37	76	300	2.6	4065	540	LW47		16
15.18	92	300	3.1	3740	510			
11.27	124	286	4.0	3325	480			
8.06	174	256	5.0	2975	420	LH47		19
6.79	206	213	4.9	2760	310	LV47	Ø24	19
4.85	288	190	6.1	2465	280	LW47		18
3.99	351	179	7.0	2310	320			
R57								450Nm
182.99	8	450	0.40	7110	610			
164.13	9	450	0.44	7110	600			
141.40	10	450	0.51	7110	600			
129.16	11	450	0.56	7110	600	LH57		19
112.90	12	450	0.64	7110	570	LV57	Ø16	21
101.77	14	450	0.71	7110	580	LW57		19
91.91	15	450	0.79	7110	560			
82.45	17	450	0.88	6920	570			
79.65	18	450	0.91	6830	460			
72.56	19	450	1.0	6560	530			
64.84	22	450	1.1	6250	720			
60.21	23	450	1.2	6060	760			
54.07	26	404	1.2	5780	760			
46.18	30	345	1.2	5390	760	LH57		19
42.48	33	317	1.2	5190	690	LV57	Ø19	22
38.14	37	285	1.2	4990	700	LW57		20
32.33	43	363	1.8	4640	700			
27.61	51	345	2.0	4400	710			
25.40	55	335	2.1	4280	640			
22.81	61	324	2.3	4130	640			

1400 Input Rpm

i	na [1/min]	Mamax [Nm]	Pe [kW]	FRa [N]	FRe [N]			m [kg]
R57								450Nm
25.27	55	382	2.4	4350	500			
23.55	59	373	2.5	4250	480	LH57		19
20.96	67	359	2.7	4090	510	LV57	Ø19	21
18.80	74	346	2.9	3940	490	LW57		19
15.53	90	325	3.3	3700	490			
11.53	121	294	4.0	3350	480			
8.24	170	263	5.0	3000	410	LH57		21
6.89	203	217	4.9	2770	310	LV57	Ø24	23
4.93	284	194	6.1	2480	280	LW57		21
4.06	345	182	7.0	2320	320			
R67								600Nm
199.88	7	600	0.48	7560	800			
169.10	8	600	0.57	7560	850			
151.03	9	600	0.64	7560	910			
140.75	10	600	0.69	7560	930			
125.28	11	600	0.77	7560	980			
112.34	12	600	0.86	7560	970			
98.69	14	600	0.98	7560	990			
92.80	15	600	1.0	7560	1020	LH67		26
78.59	18	600	1.2	7390	580	LV67	Ø19	28
68.90	20	514	1.2	6980	1030	LW67		25
63.07	22	471	1.2	6320	570			
58.23	24	435	1.2	6480	680			
52.21	27	390	1.2	6170	660			
45.87	31	600	2.1	5820	670			
41.22	34	501	2.0	5570	770			
38.75	36	490	2.0	5455	800			
32.02	44	556	2.8	5075	750			
28.77	49	444	2.5	4940	870			
22.90	61	498	3.5	4540	750	LH67		28
						LV67	Ø24	29
						LW67		27
24.14	58	506	3.3	4620	410	LH67		25
21.33	66	486	3.6	4430	420	LV67	Ø19	26
18.79	74	466	3.9	4250	450	LW67		24
15.41	91	436	4.4	3975	490			
12.53	112	407	5.1	3710	500			
9.90	141	376	5.9	3430	520	LH67		26
6.06	231	264	6.8	2940	290	LV67	Ø24	28
5.23	267	252	7.5	2800	310	LW67		25
4.14	338	233	8.8	2590	340			

1400 Input Rpm

i	na [1/min]	Mamax [Nm]	Pe [kW]	FRa [N]	FRe [N]			m [kg]
R77								750Nm
194.80	7	750	0.62	8620	690			
170.05	8	750	0.71	8620	750			
153.87	9	750	0.78	8620	770			
140.70	10	750	0.86	8620	830			
124.34	11	750	0.97	8620	840			
109.54	13	750	1.1	8620	870	LH77		34
89.80	16	671	1.2	8620	900	LV77	Ø19	40
84.62	17	632	1.2	8620	920	LW77		36
73.05	19	750	1.7	8100	920			
57.73	24	750	2.1	7320	910			
53.24	26	750	2.3	7060	460			
46.90	30	750	2.6	6670	470			
39.31	36	667	2.7	6100	560			
37.04	38	654	2.8	5980	570			
31.97	44	623	3.1	5700	600	LH77		34
25.27	55	576	3.7	5270	650	LV77	Ø24	40
						LW77		36
23.31	60	661	4.4	5080	230	LH77		32
18.08	77	607	5.2	4670	330	LV77	Ø19	38
						LW77		34
14.83	94	568	6.0	4370	320	LH77		32
						LV77	Ø24	38
						LW77		34
13.21	106	547	6.5	4200	1570			
11.85	118	527	6.9	4050	1590			
10.91	128	513	7.3	3940	1580	LH77		37
9.21	152	485	8.2	3730	1590	LV77	Ø38	43
5.78	242	352	9.5	3220	1420	LW77		39
4.78	293	330	10.8	3020	1420			
4.03	347	312	12.1	2860	1430			

MODERNA MOTORI

1400 Input Rpm

i	na [1/min]	Mamax [Nm]	Pe [kW]	FRa [N]	FRe [N]			m [kg]
R87								1550Nm
201.38	7	1504	1.2	16900	590			
179.70	8	1342	1.2	16900	570			
161.11	9	1203	1.2	16900	570	LH87		62
137.42	10	1026	1.2	16900	560	LV87	Ø19	65
122.17	11	1550	2.0	16900	510	LW87		61
112.52	12	1550	2.2	16900	500			
87.27	16	1550	2.9	16900	500			
71.60	20	1486	3.3	16900	450			
63.77	22	1429	3.6	16900	450	LH87		63
61.54	23	1413	3.7	16900	370	LV87	Ø28	67
54.81	26	1359	4.0	16900	400	LW87		63
49.16	28	1311	4.3	16500	410			
45.27	31	1275	4.5	16100	1590			
38.20	37	1205	5.1	15200	1580	LH87		67
31.73	44	950	4.8	14400	1440	LV87	Ø38	71
24.29	58	869	5.8	13100	1400	LW87		67
20.06	70	815	6.5	12300	1380			
22.83	61	1015	6.9	12800	1080	LH87		65
19.83	71	968	7.6	12200	1080	LV87	Ø38	69
17.51	80	929	8.3	11700	1100	LW87		65
15.29	92	888	9.1	11200	3380			
12.98	108	841	10.1	10600	3440			
11.33	124	804	11.1	10100	3380			
10.66	131	787	11.5	9930	3410	LH87		73
9.15	153	748	12.7	9440	3390	LV87	Ø42	77
6.78	207	568	13.1	8590	2620	LW87		73
5.75	243	538	14.6	8130	2650			
4.73	296	504	16.6	7610	2630			
4.06	345	479	18.4	7240	2600			

1400 Input Rpm

i	na [1/min]	Mamax [Nm]	Pe [kW]	FRa [N]	FRe [N]			m [kg]
R97								3000Nm
199.06	7	3000	2.4	18100	620			
181.06	8	3000	2.7	18100	620			
166.33	8	3000	2.9	18100	550	LH97		101
144.53	10	3000	3.3	18100	530	LV97	Ø28	108
127.61	11	3000	3.8	18100	520	LW97		97
111.42	13	3000	4.3	18100	510			
97.76	14	3000	4.9	18100	390			
94.59	15	3000	5.1	18100	500			
85.35	16	3000	5.7	18100	1590			
82.59	17	3000	5.8	18100	1650			
77.70	18	3000	6.2	18100	1660			
72.46	19	3000	6.7	18100	1580	LH97		104
66.71	21	3000	7.2	18100	1620	LV97	Ø38	111
63.27	22	3000	7.6	18100	1530	LW97		100
59.52	24	3000	8.1	18100	1530			
51.10	27	3000	9.4	18100	1490			
44.57	31	2849	10.3	17500	1200			
37.84	37	2759	11.7	16400	3580	LH97		113
28.98	48	2525	14.0	15000	3210	LV97	Ø42	120
25.31	55	2413	15.3	14300	3150	LW97		109
33.00	42	2784	13.2	16700	2500	LH97		110
29.10	48	2720	14.6	15800	2500	LV97	Ø42	114
21.23	66	2568	18.9	14000	2480	LW97		103
16.96	83	2545	23	12600	3330			
13.56	103	2376	27	11700	3310			
10.00	140	2147	33	10500	3280	LH97		117
8.49	165	1668	31	9980	2760	LV97	Ø48	121
6.78	206	1547	36	9260	2750	LW97		110
5.42	258	1436	41	8590	2740			
4.00	350	1298	51	7760	2690			
R107								4300Nm
115.50	12	4300	6.0	29500	1590			
106.76	13	4300	6.5	29500	1560	MH107		160
103.02	14	4300	6.7	29500	1440	MV107	Ø38	163
86.50	16	4300	8.0	29500	1320	MW107		152
79.95	18	4300	8.6	28600	1260			
68.27	21	4300	10.1	26400	1120			
62.90	22	4300	11.0	25700	4040	MH107		168
53.71	26	4300	12.9	23600	3790	MV107	Ø42	171
53.00	26	4300	13.0	23900	3760	MW107		161
44.50	31	4300	15.5	21800	4900			
39.52	35	4300	17.5	20800	4630			
34.23	41	4128	19.4	19500	5330	MH107		174
29.23	48	3803	21	18500	5190	MV107	Ø48	177
25.52	55	3743	24	17700	4960	MW107		167
21.79	64	3449	25	16800	4800			
13.09	107	2601	32	14200	4230			
24.40	57	3793	24	17400	3200			
21.77	64	3652	26	16700	2840	MH107		164
14.38	97	3092	34	14600	3110	MV107	Ø48	167
10.44	134	2859	43	13100	3590	MW107		156
4.50	311	1822	63	9980	2930			
4.00	350	1753	68	9600	2610			

1400 Input Rpm

i	na [1/min]	Mamax [Nm]	Pe [kW]	FRa [N]	FRe [N]			m [kg]
R137								7000Nm
117.25	12	7000	9.6	37500	3750			
107.80	13	7000	10.4	37500	3590	MH137		254
99.66	14	7000	11.3	37500	3440	MV137	Ø42	266
91.63	15	7000	12.3	37500	3260	MW137		250
79.05	18	7000	14.2	37400	2900			
70.35	20	7000	16.0	35600	2650			
59.14	24	7000	19.0	32900	4340			
54.38	26	7000	21	31500	4110	MH137		260
50.13	28	7000	22	29800	3860	MV137	Ø48	271
44.49	31	7000	25	28600	3460	MW137		255
43.25	32	7000	26	27700	3370			
35.39	40	7000	32	25000	3130			
32.81	43	7000	34	24100	6240	MH137		272
24.24	58	6254	41	20500	5960	MV137	Ø55	284
20.68	68	5932	46	19500	6110	MW137		268
14.60	96	5282	58	17300	5720			
23.45	60	2786	18.5	28500	2520	MH137		243
21.56	65	2868	21	27400	2410	MV137	Ø42	255
17.15	82	2771	25	24900	2180	MW137		239
14.96	94	4335	45	21000	5820			
13.75	102	4247	48	20200	5700	MH137		261
10.12	138	4472	69	17100	5380	MV137	Ø55	272
8.05	174	3710	72	16400	5280	MW137		257
4.87	288	2266	73	15000	5260			
4.04	346	2216	85	13900	5130			
R147								13000Nm
117.29	12	13000	17.8	62700	2800	MH147		398
109.03	13	13000	19.2	62700	2740	MV147	Ø42	390
						MW147		374
99.44	14	13000	21	62700	4170			
89.86	16	13000	23	62700	4100	MH147		402
83.30	17	13000	25	62700	4020	MV147	Ø48	394
70.80	20	13000	30	62700	3880	MW147		378
60.38	23	13000	35	61300	3770			
50.49	28	12994	41	56800	6560			
44.98	31	12501	45	54600	5940	MH147		416
41.70	34	12189	47	53200	5930	MV147	Ø55	407
35.44	40	11546	52	50400	5950	MW147		392
30.23	46	10950	58	47800	5970			
25.27	55	10316	66	45100	8450	MH147		439
19.99	70	9541	77	41700	8450	MV147	Ø70	431
						MW147		415
15.62	90	8787	88	38400	7440			
13.32	105	8333	98	36400	7480	MH147		439
10.24	137	7462	114	33400	7070	MV147	Ø70	431
5.00	280	5877	183	26300	6910	MW147		415
4.16	337	5526	207	24700	6810			

1400 Input Rpm

i	na [1/min]	Mamax [Nm]	Pe [kW]	FRa [N]	FRe [N]			m [kg]
R167								18000Nm
178.17	8	18000	16.2	88200	2870			
169.42	8	18000	17.1	88200	2890	MH167	Ø42	579
158.37	9	18000	18.3	88200	2860	MV167		578
139.60	10	18000	21	88200	2790			
121.56	12	18000	24	88200	4110			
109.89	13	18000	26	86000	4140			
101.64	14	18000	28	83400	4030	MH167	Ø48	588
88.17	16	18000	33	78700	3940	MV167		586
80.58	17	18000	36	75800	3850			
69.80	20	18000	41	71400	3730			
60.56	23	18000	48	67300	6570			
53.92	26	18000	54	61700	5860	MH167	Ø55	598
48.52	29	18000	60	58900	5420	MV167		596
43.86	32	18000	66	56200	5460			
35.19	40	18000	82	50800	7860	MH167		617
27.86	50	16900	97	46800	7850	MV167	Ø70	615
21.19	66	15400	117	42700	7820			
23.78	59	18000	118	44500	3300	MH167		639
						MV167	Ø55	637
19.89	70	17400	136	41400	6100			
15.77	89	16100	159	38400	6150			
13.66	103	15400	176	36600	6190	MH167	Ø70	658
10.39	135	14000	210	33400	6140	MV167		656
5.10	275	9600	294	26500	4640			
3.93	356	7600	301	25700	5340			

Dimension Sheets

R..

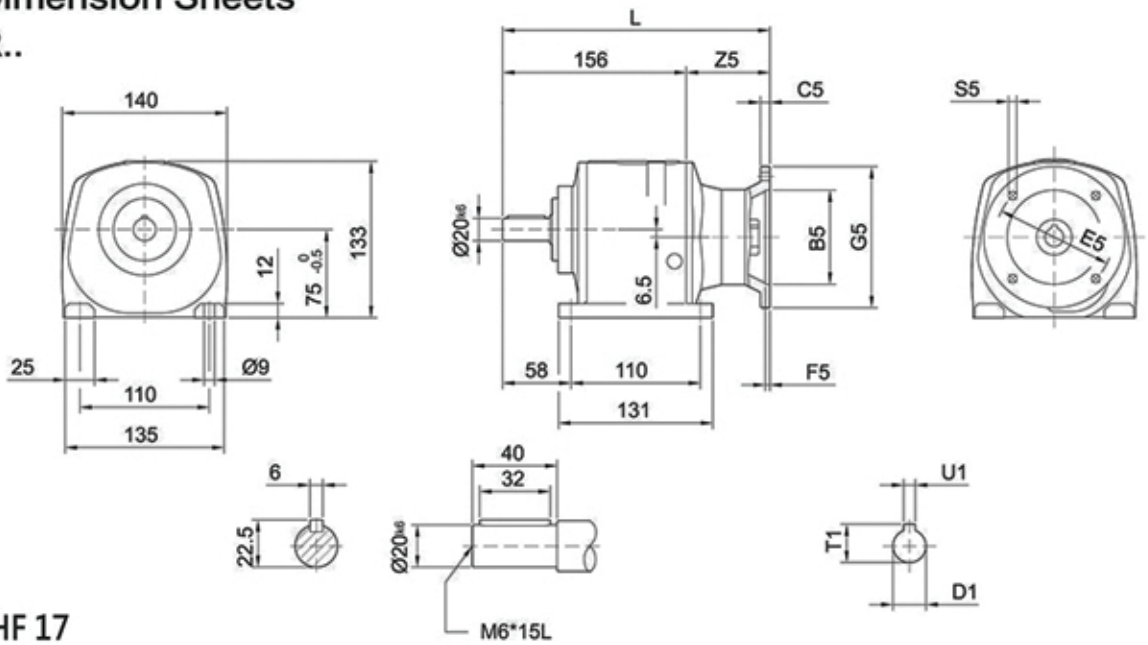

MHF 17

	B5	C5	E5	F5	G5	L	S5	Z5	D1	T1	U1
IEC 56	50	8	65	3	80	212.5	6	56.5	9	10.4	3
IEC 63	60	8	75	3.5	90	212.5	6	56.5	11	12.8	4
IEC 71	70	8	85	3.5	105	212.5	7	56.5	14	16.3	5
IEC 80	80	8	100	4	120	227	7	71	19	21.8	6

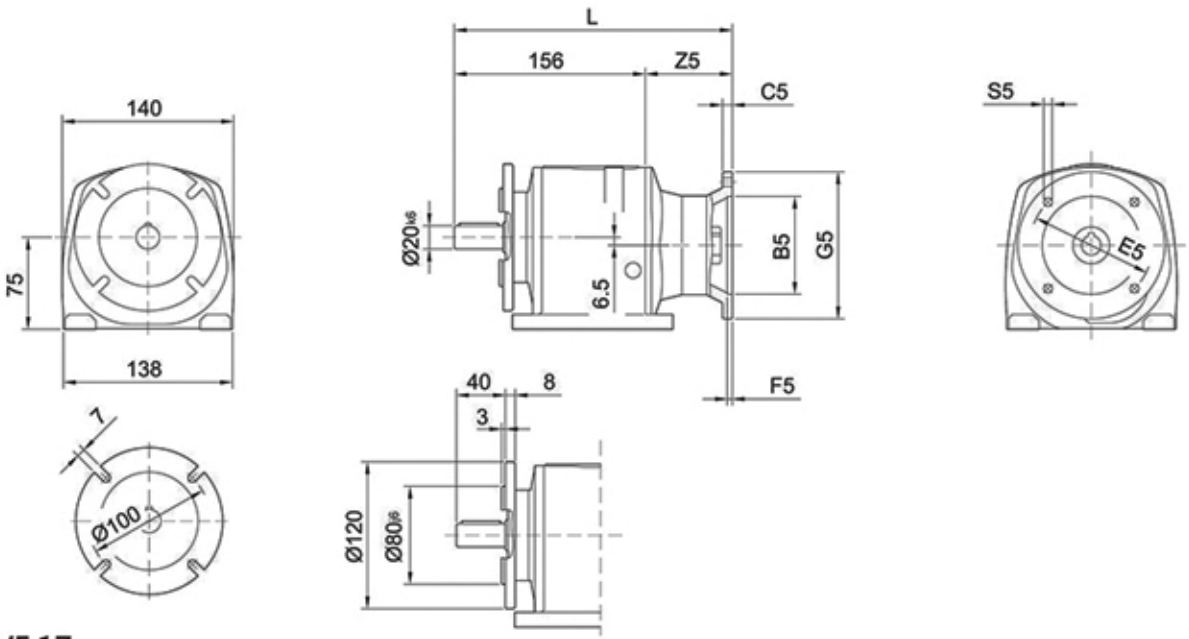

MVF 17

	B5	C5	E5	F5	G5	L	S5	Z5	D1	T1	U1
IEC 56	50	8	65	3	80	212.5	6	56.5	9	10.4	3
IEC 63	60	8	75	3.5	90	212.5	6	56.5	11	12.8	4
IEC 71	70	8	85	3.5	105	212.5	7	56.5	14	16.3	5
IEC 80	80	8	100	4	120	227	7	71	19	21.8	6

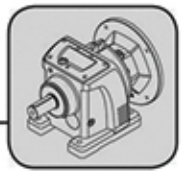

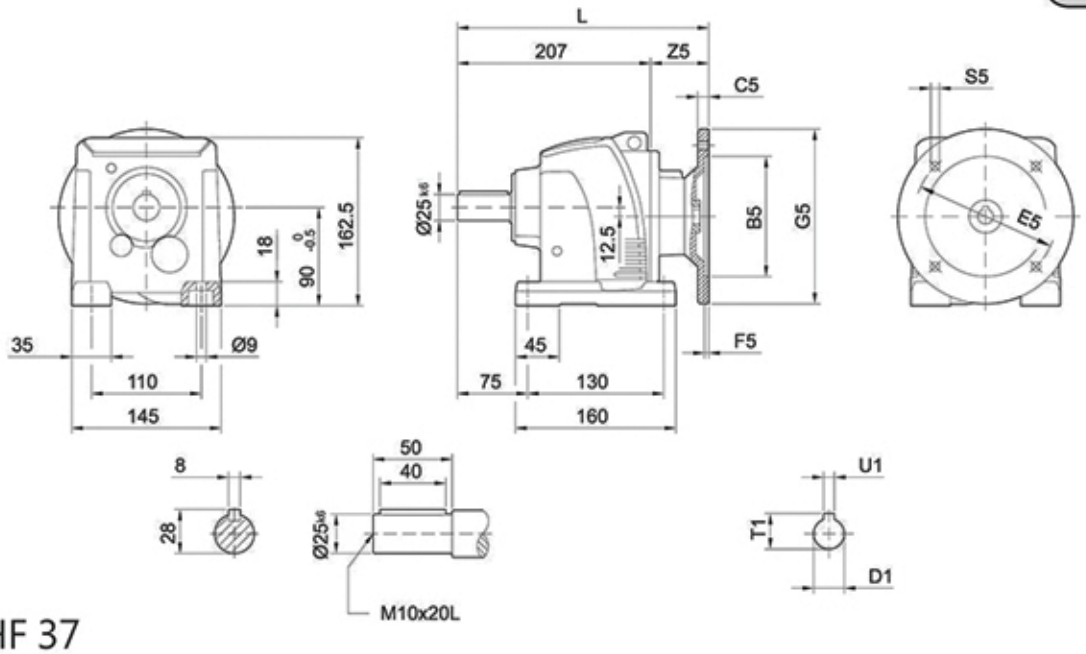

LHF 37

	B5	C5	E5	F5	G5	L	S5	Z5	D1	T1	U1
IEC 63	95	10	115	4	140	260	M8	53	11	12.8	4
IEC 71	110	10	130	4	160	260	M8	56	14	16.3	5
IEC 80	130	12	165	5	200	278	M10	71	19	21.8	6
IEC 90	130	12	165	5	200	278	M10	71	24	27.3	8
IEC 71 B14	70	10	85	4	105	260	7	56	14	16.3	5
IEC 80 B14	80	12	100	5	120	278	7	71	19	21.8	6

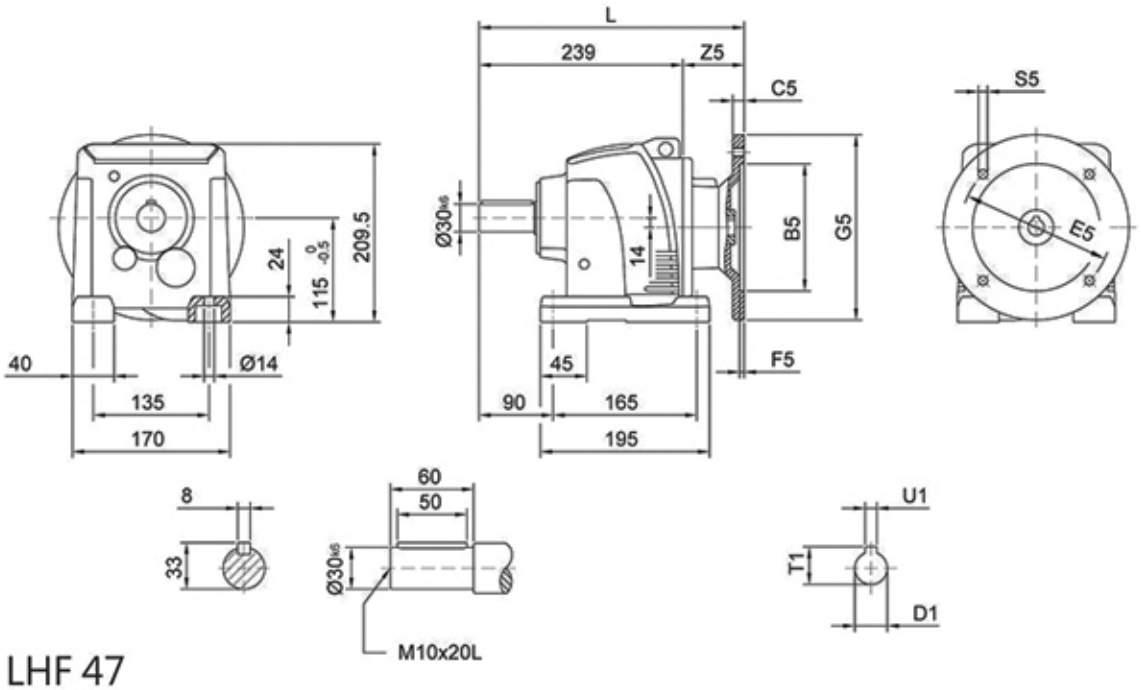

LHF 47

	B5	C5	E5	F5	G5	L	S5	Z5	D1	T1	U1
IEC 63	95	10	115	4	140	287.5	M8	48.5	11	12.8	4
IEC 71	110	10	130	4	160	287.5	M8	48.5	14	16.3	5
IEC 80	130	12	165	5	200	305.5	M10	66.5	19	21.8	6
IEC 90	130	12	165	5	200	305.5	M10	66.5	24	27.3	8
IEC 100	180	15	215	5	250	322	M12	83	28	31.3	8

L ..F 37

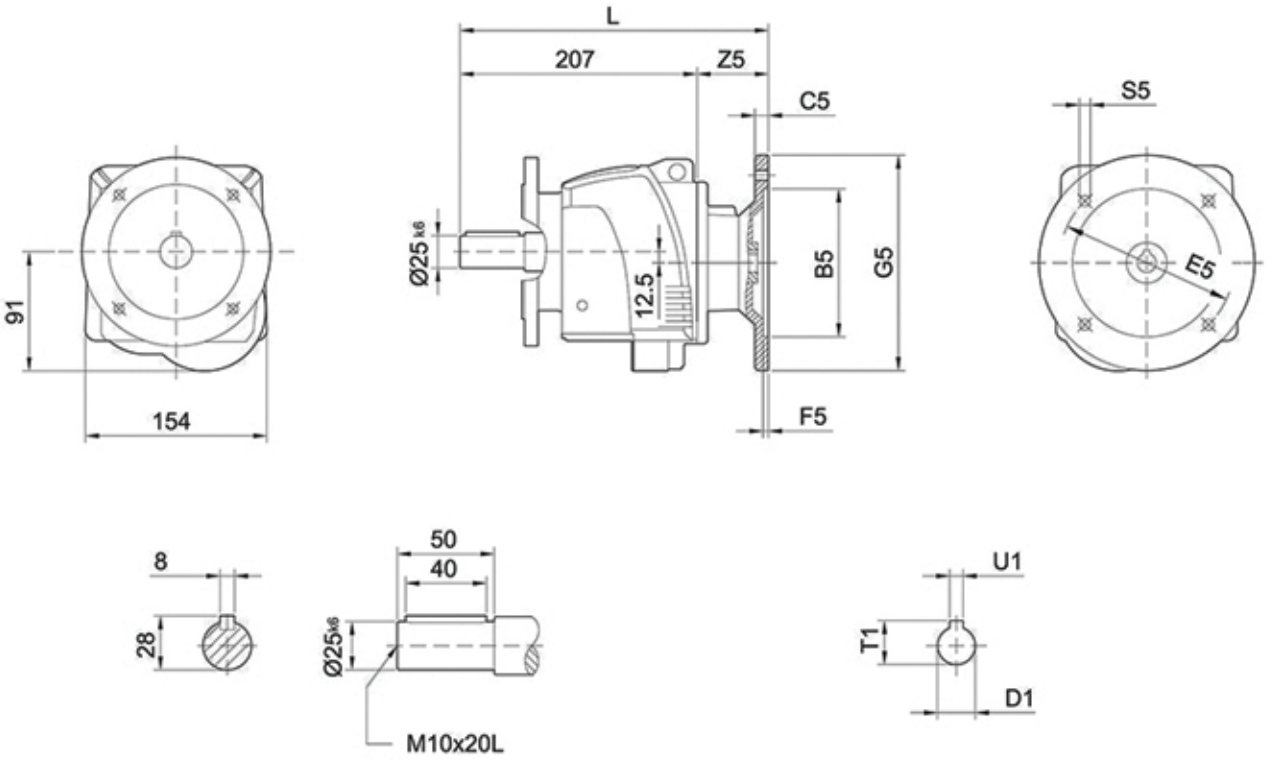

LVF 37

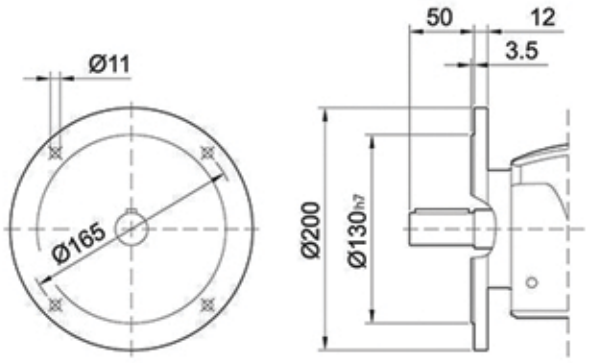

LWF 37

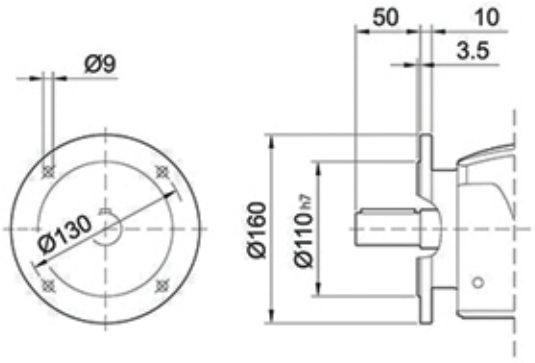

	B5	C5	E5	F5	G5	L	S5	Z5	D1	T1	U1
IEC 63	95	10	115	4	140	260	M8	53	11	12.8	4
IEC 71	110	10	130	4	160	260	M8	56	14	16.3	5
IEC 80	130	12	165	5	200	278	M10	71	19	21.8	6
IEC 90	130	12	165	5	200	278	M10	71	24	27.3	8
IEC 71 B14	70	10	85	4	105	260	7	56	14	16.3	5
IEC 80 B14	80	12	100	5	120	278	7	71	19	21.8	6

L ..F 47

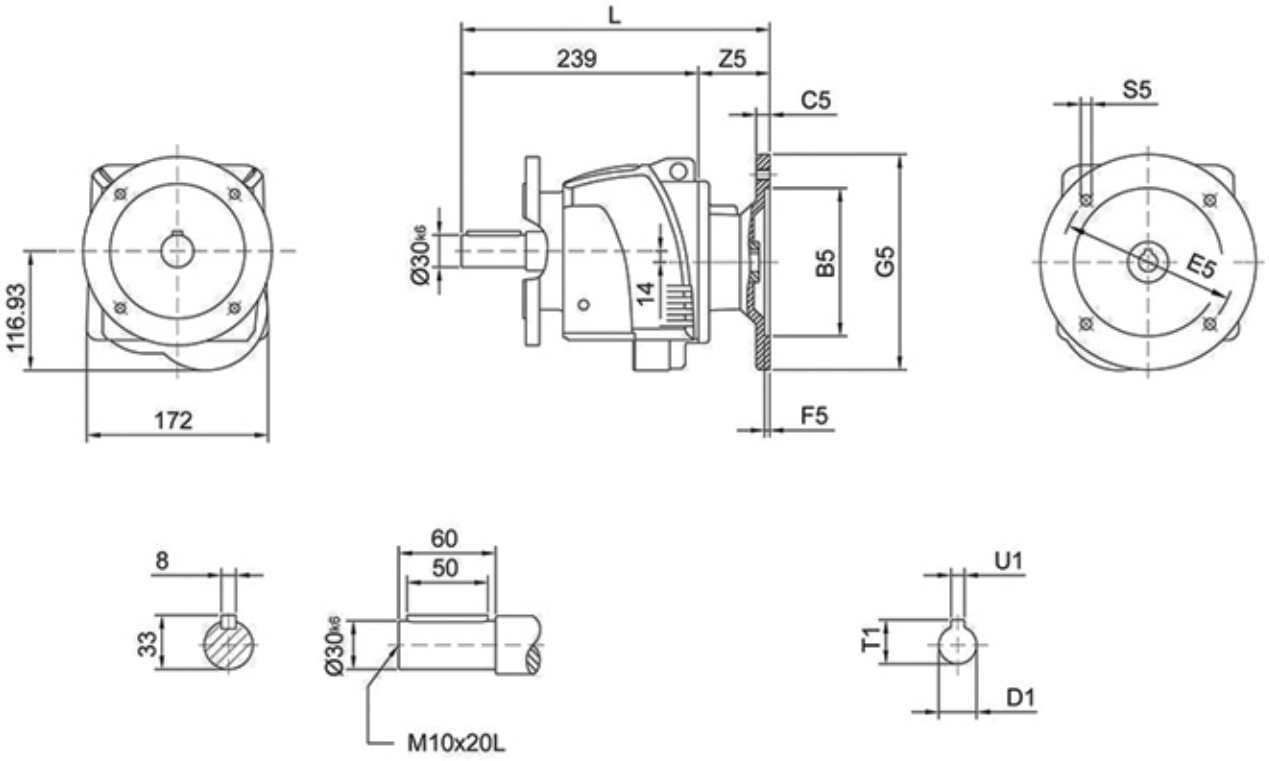

LVF 47

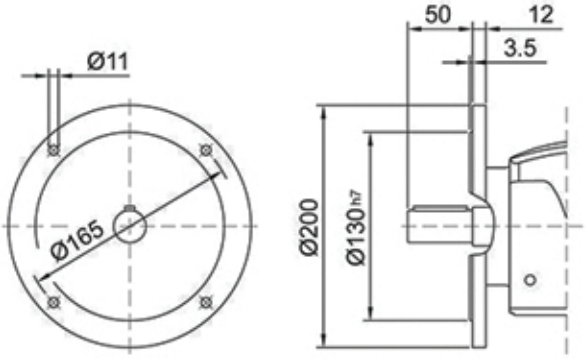

LWF 47

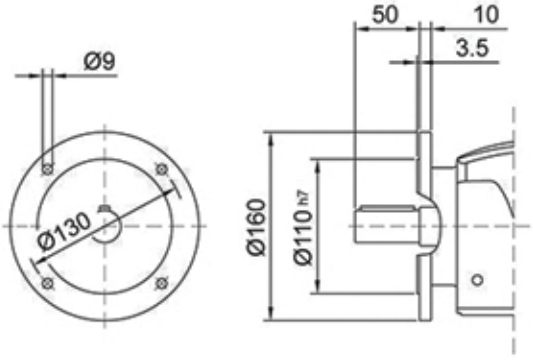

	B5	C5	E5	F5	G5	L	S5	Z5	D1	T1	U1
IEC 63	95	10	115	4	140	287.5	M8	48.5	11	12.8	4
IEC 71	110	10	130	4	160	287.5	M8	48.5	14	16.3	5
IEC 80	130	12	165	5	200	305.5	M10	66.5	19	21.8	6
IEC 90	130	12	165	5	200	305.5	M10	66.5	24	27.3	8
IEC 100	180	15	215	5	250	322	M12	83	28	31.3	8

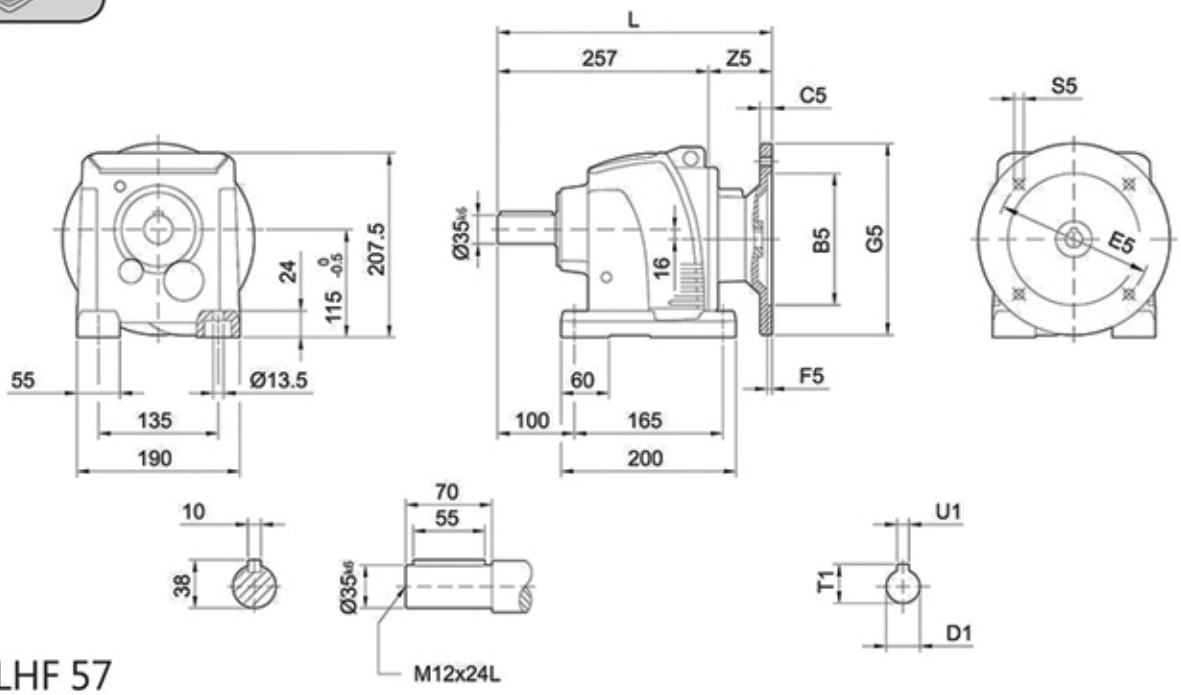

LHF 57

	B5	C5	E5	F5	G5	L	S5	Z5	D1	T1	U1
IEC 63	95	10	115	4	140	287.5	M8	48.5	11	12.8	4
IEC 71	110	10	130	4	160	287.5	M8	48.5	14	16.3	5
IEC 80	130	12	165	5	200	305.5	M10	66.5	19	21.8	6
IEC 90	130	12	165	5	200	305.5	M10	66.5	24	27.3	8
IEC 100	180	15	215	5	250	322	M12	83	28	31.3	8
IEC 112	180	15	215	5	250	322	M12	83	28	31.3	8

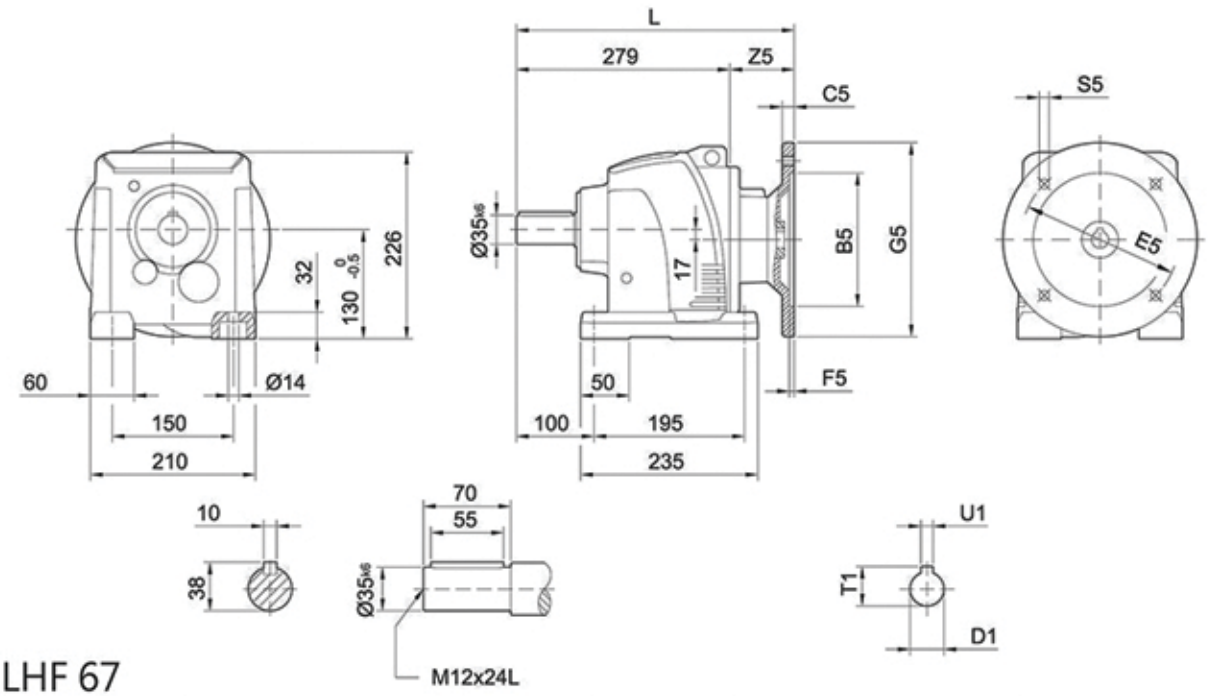

LHF 67

	B5	C5	E5	F5	G5	L	S5	Z5	D1	T1	U1
IEC 63	95	10	115	4	140	325.5	M8	46.5	11	12.8	4
IEC 71	110	10	130	4	160	325.5	M8	46.5	14	16.3	5
IEC 80	130	12	165	5	200	343.5	M10	64.5	19	21.8	6
IEC 90	130	12	165	5	200	343.5	M10	64.5	24	27.3	8
IEC 100	180	15	215	5	250	360	M12	81	28	31.3	8
IEC 112	180	15	215	5	250	360	M12	81	28	31.3	8

L ..F 57

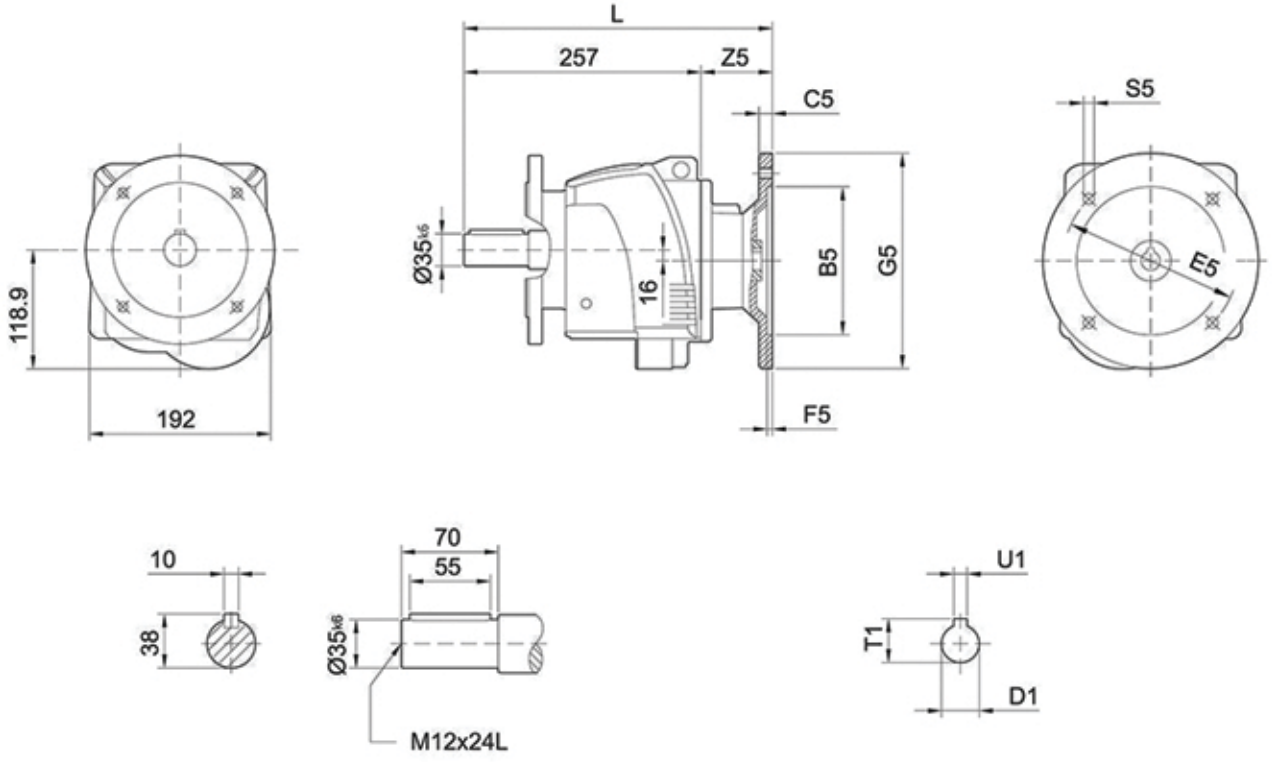

LVF 57

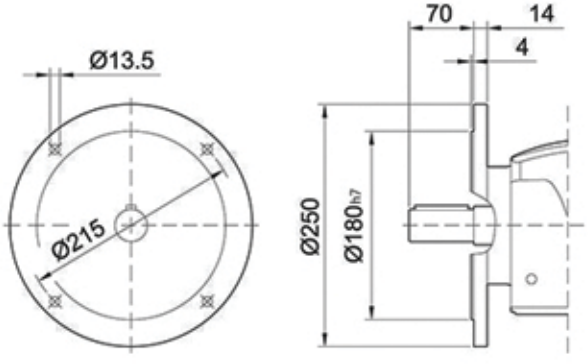

LWF 57

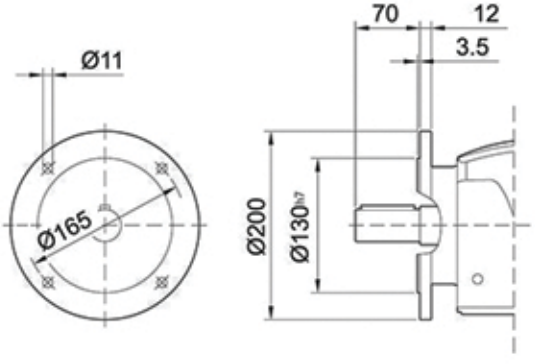

	B5	C5	E5	F5	G5	L	S5	Z5	D1	T1	U1
IEC 63	95	10	115	4	140	287.5	M8	48.5	11	12.8	4
IEC 71	110	10	130	4	160	287.5	M8	48.5	14	16.3	5
IEC 80	130	12	165	5	200	305.5	M10	66.5	19	21.8	6
IEC 90	130	12	165	5	200	305.5	M10	66.5	24	27.3	8
IEC 100	180	15	215	5	250	322	M12	83	28	31.3	8
IEC 112	180	15	215	5	250	322	M12	83	28	31.3	8

L ..F 67

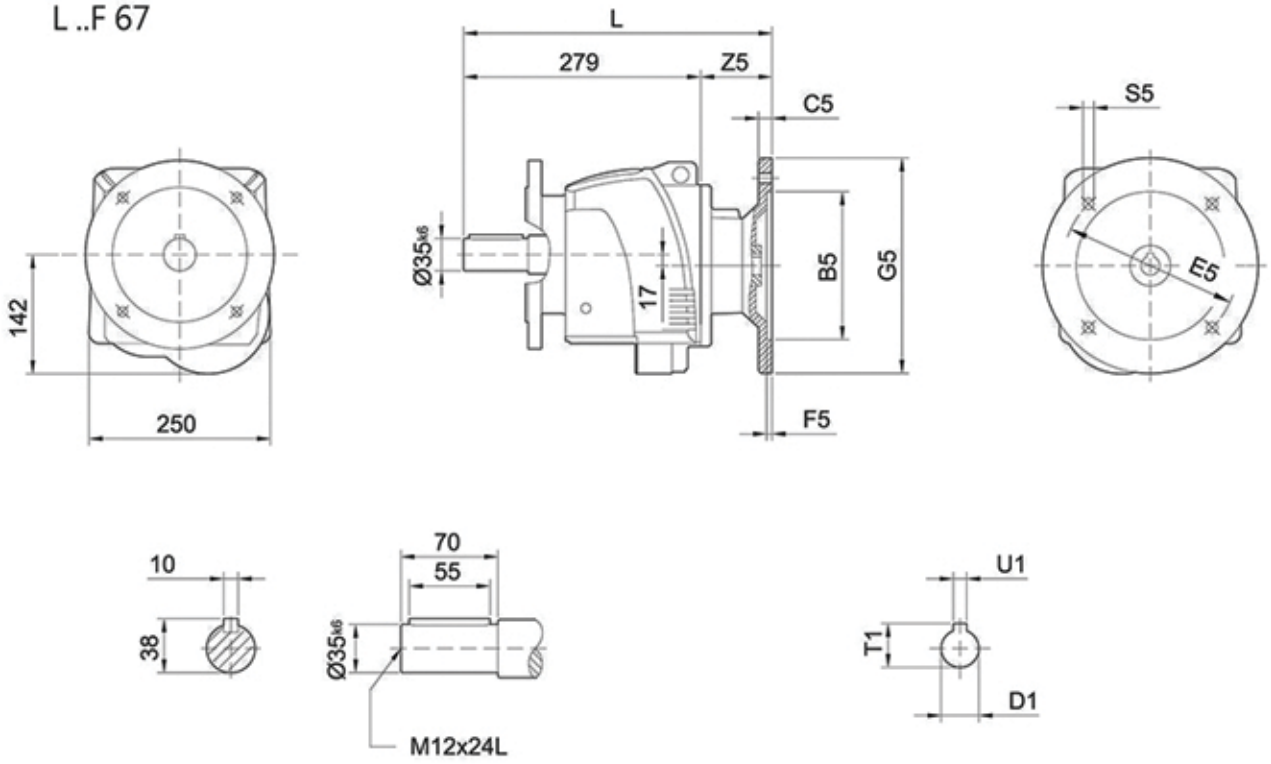

LVF 67

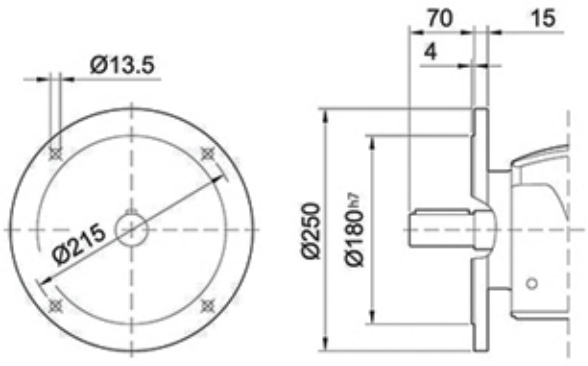

LWF 67

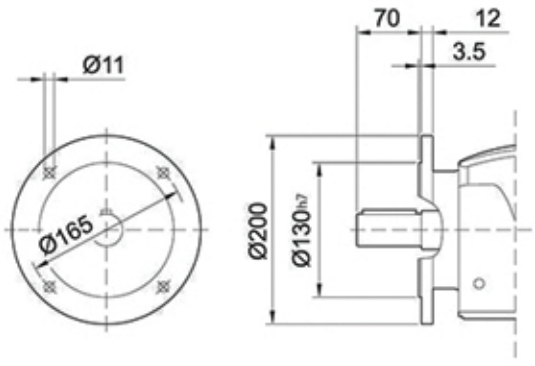

	B5	C5	E5	F5	G5	L	S5	Z5	D1	T1	U1
IEC 63	95	10	115	4	140	325.5	M8	46.5	11	12.8	4
IEC 71	110	10	130	4	160	325.5	M8	46.5	14	16.3	5
IEC 80	130	12	165	5	200	343.5	M10	64.5	19	21.8	6
IEC 90	130	12	165	5	200	343.5	M10	64.5	24	27.3	8
IEC 100	180	15	215	5	250	360	M12	81	28	31.3	8
IEC 112	180	15	215	5	250	360	M12	81	28	31.3	8

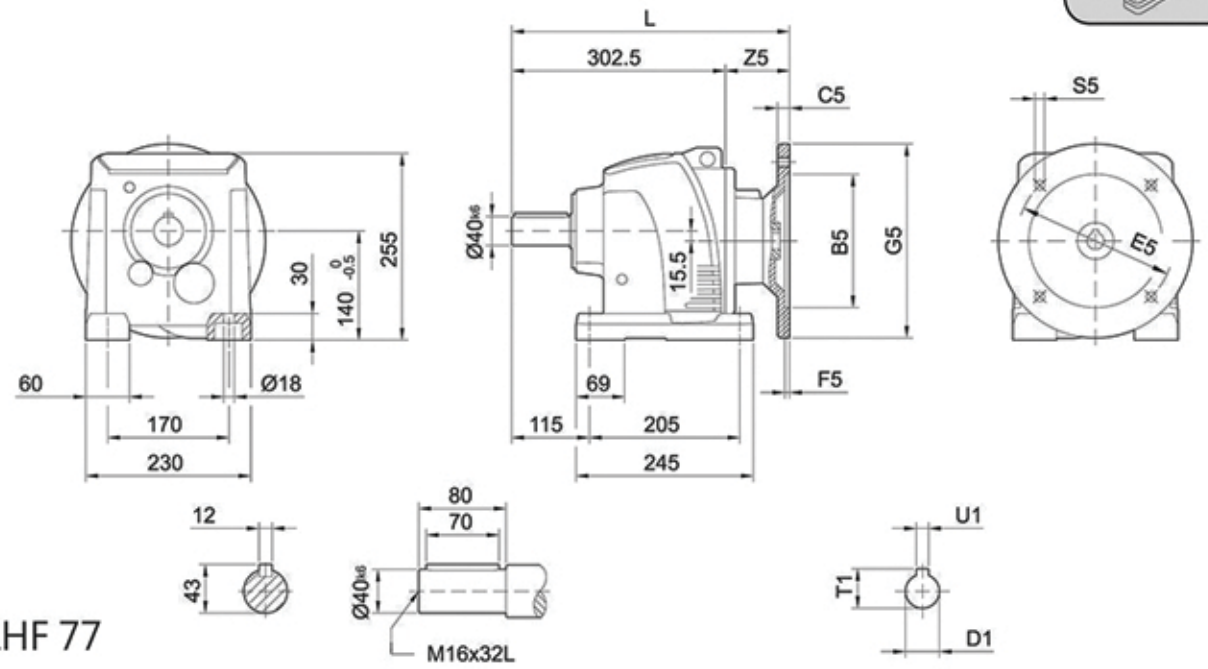

LHF 77

	B5	C5	E5	F5	G5	L	S5	Z5	D1	T1	U1
IEC 71	110	10	130	4	160	353.5	M8	51	14	16.3	5
IEC 80	130	12	165	5	200	361.5	M10	59	19	21.8	6
IEC 90	130	12	165	5	200	361.5	M10	59	24	27.3	8
IEC 100	180	15	215	5	250	378	M12	75.5	28	31.3	8
IEC 112	180	15	215	5	250	378	M12	75.5	28	31.3	8
IEC 132	230	16	265	6	300	425	M12	124	38	41.3	10

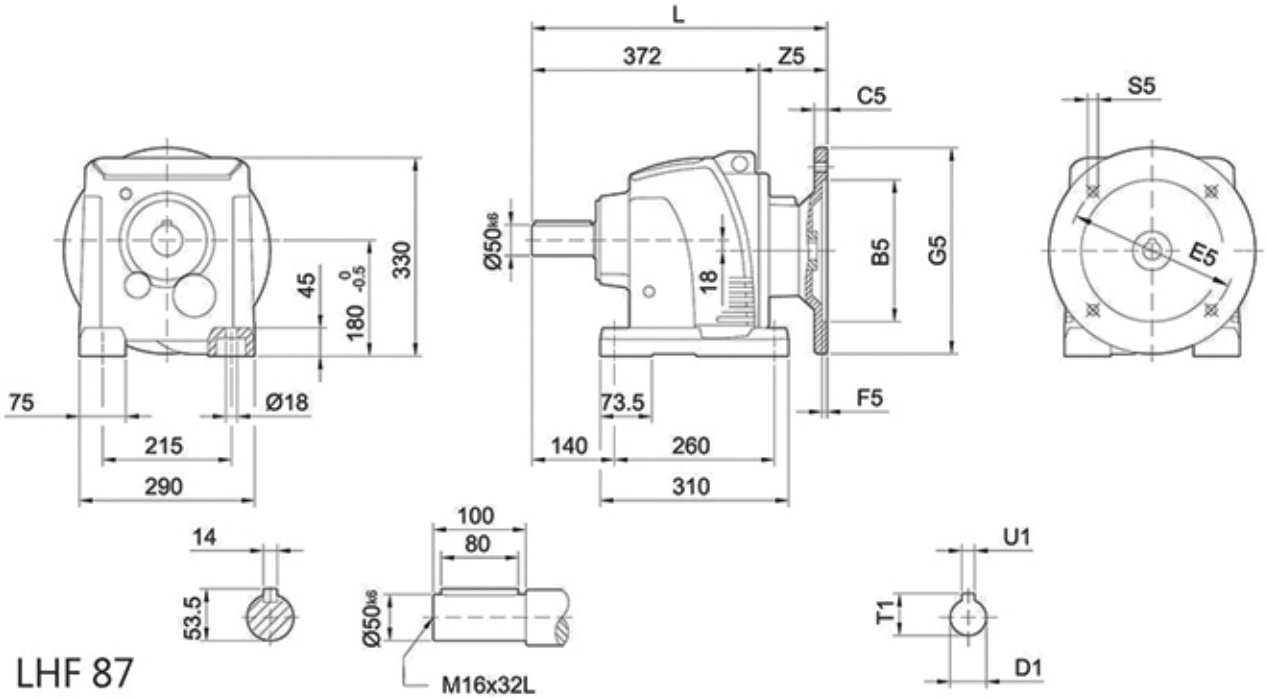

LHF 87

	B5	C5	E5	F5	G5	L	S5	Z5	D1	T1	U1
IEC 80	130	12	165	5	200	437	M10	65	19	21.8	6
IEC 90	130	12	165	5	200	437	M10	65	24	27.3	8
IEC 100	180	15	215	5	250	438	M12	66	28	31.3	8
IEC 112	180	15	215	5	250	438	M12	66	28	31.3	8
IEC 132	230	16	265	6	300	486.5	M12	114.5	38	41.3	10
IEC 160	250	20	300	6	350	522.5	M16	150.5	42	45.3	12

L ..F 77

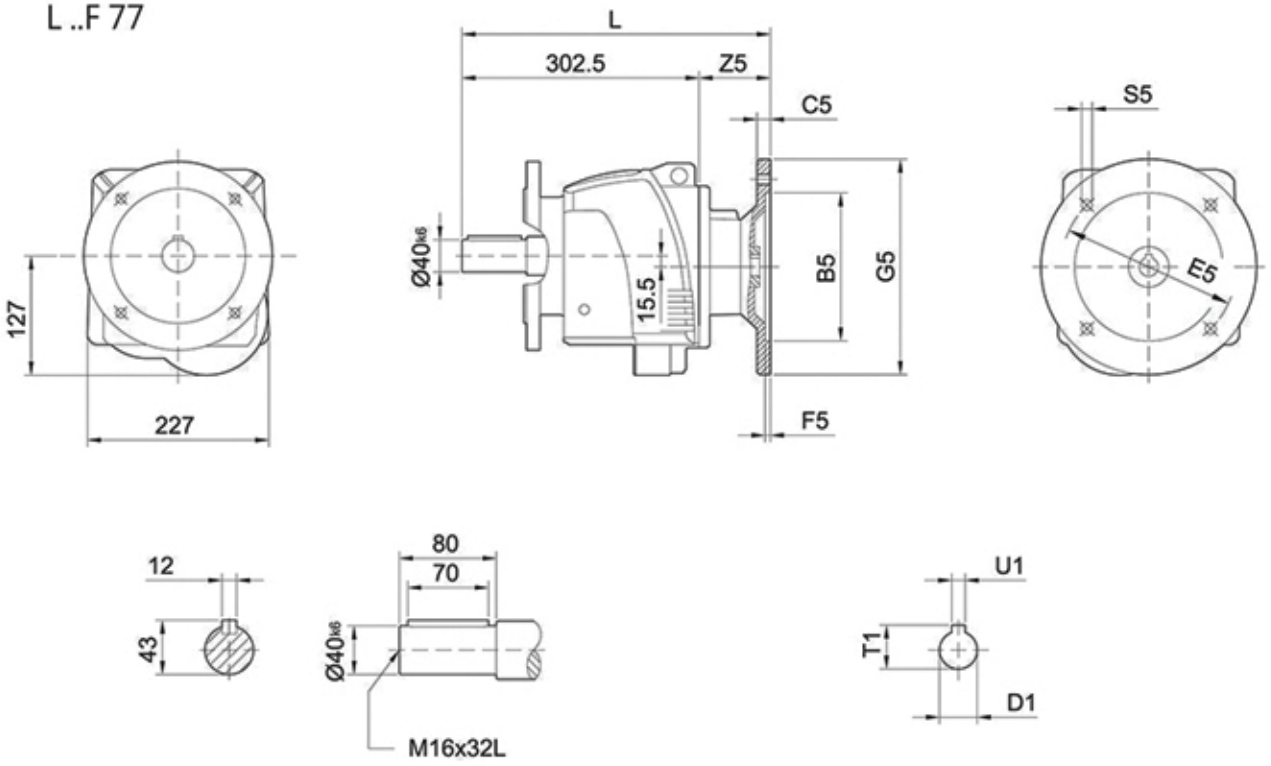

LVF 77

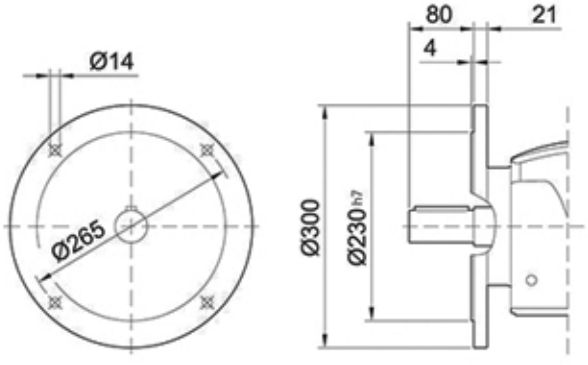

LWF 77

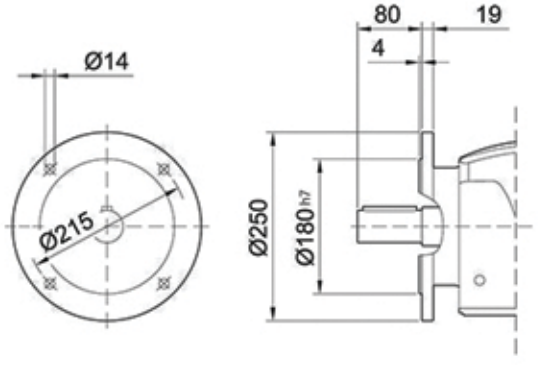

	B5	C5	E5	F5	G5	L	S5	Z5	D1	T1	U1
IEC 71	110	10	130	4	160	353.5	M8	51	14	16.3	5
IEC 80	130	12	165	5	200	361.5	M10	59	19	21.8	6
IEC 90	130	12	165	5	200	361.5	M10	59	24	27.3	8
IEC 100	180	15	215	5	250	378	M12	75.5	28	31.3	8
IEC 112	180	15	215	5	250	378	M12	75.5	28	31.3	8
IEC 132	230	16	265	6	300	425	M12	124	38	41.3	10

L ..F 87

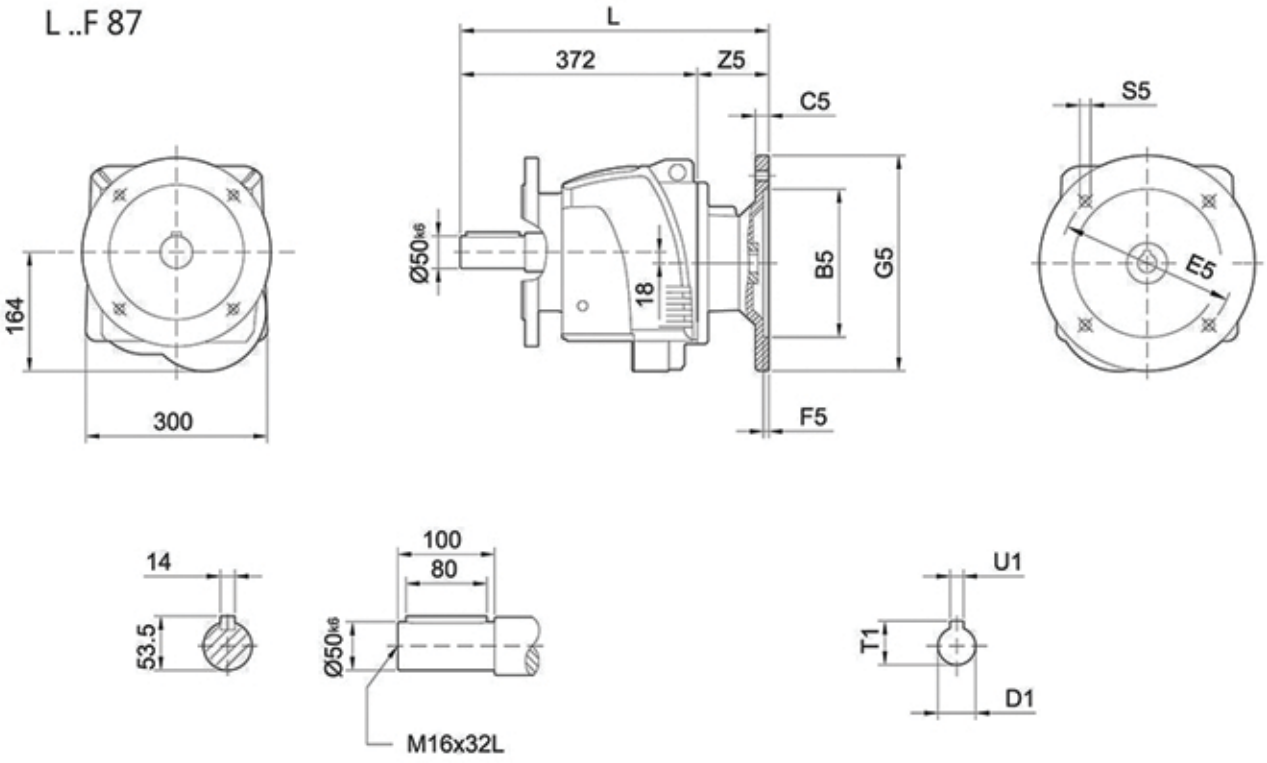

LVF 87

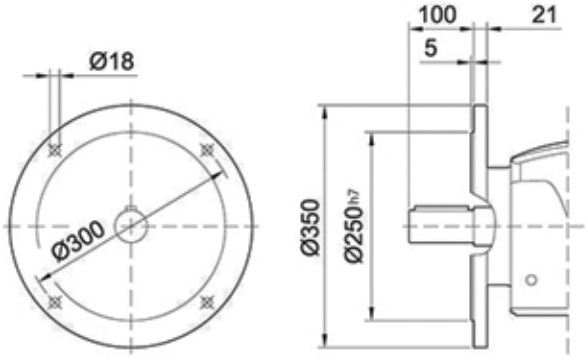

LWF 87

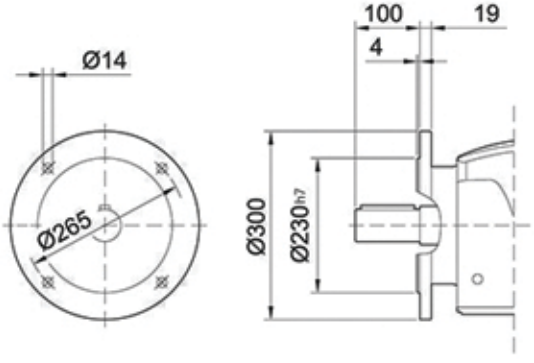

	B5	C5	E5	F5	G5	L	S5	Z5	D1	T1	U1
IEC 80	130	12	165	5	200	437	M10	65	19	21.8	6
IEC 90	130	12	165	5	200	437	M10	65	24	27.3	8
IEC 100	180	15	215	5	250	438	M12	66	28	31.3	8
IEC 112	180	15	215	5	250	438	M12	66	28	31.3	8
IEC 132	230	16	265	6	300	486.5	M12	114.5	38	41.3	10
IEC 160	250	20	300	6	350	522.5	M16	150.5	42	45.3	12

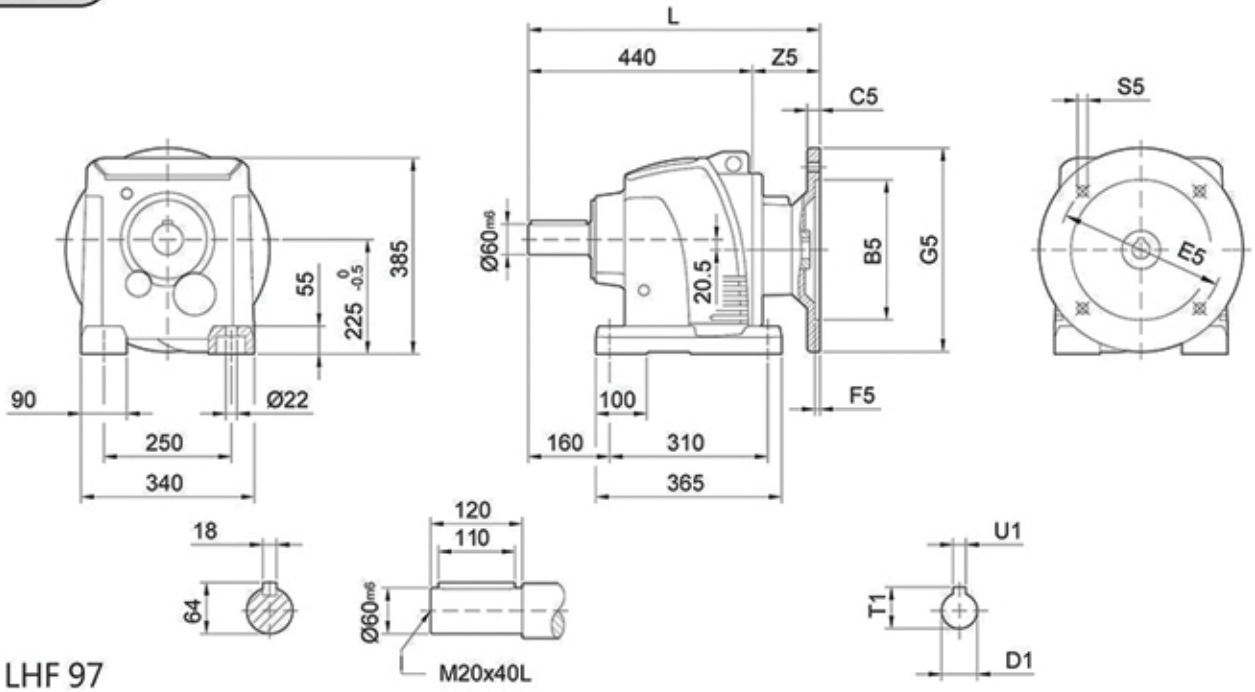

LHF 97

	B5	C5	E5	F5	G5	L	S5	Z5	D1	T1	U1
IEC 100	180	15	215	5	250	502	M12	62	28	31.3	8
IEC 112	180	15	215	5	250	502	M12	62	28	31.3	8
IEC 132	230	16	265	6	300	546.5	M12	106.5	38	41.3	10
IEC 160	250	20	300	6	350	582.5	M16	142.5	42	45.3	12
IEC 180	250	20	300	6	350	591.5	M16	151.5	48	51.8	14

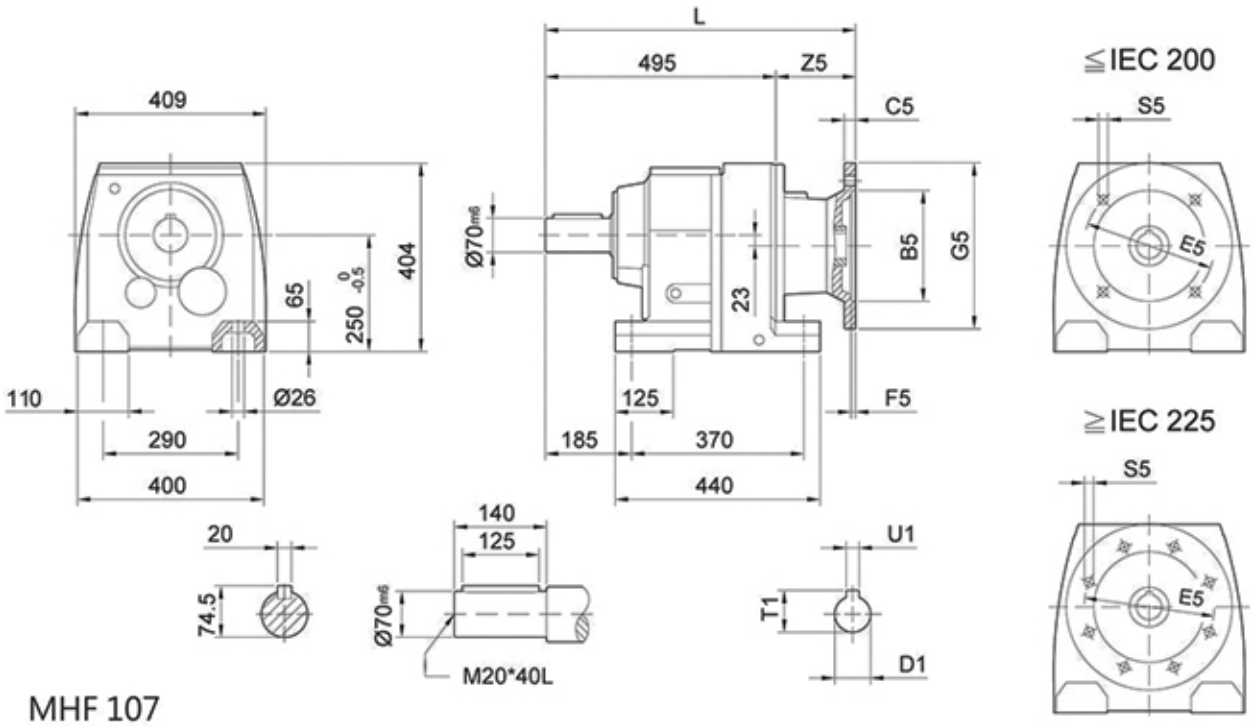

MHF 107

	B5	C5	E5	F5	G5	L	S5	Z5	D1	T1	U1
IEC 132	230	16	265	6	300	592	M12	97	38	41.3	10
IEC 160	250	20	300	6	350	628	M16	133	42	45.3	12
IEC 180	250	20	300	6	350	637	M16	142	48	51.8	14
IEC 200	300	20	350	6	400	637	M16	142	55	59.3	16
IEC 225	350	20	400	6	450	668	M16	173	60	64.4	18

L ..F 97

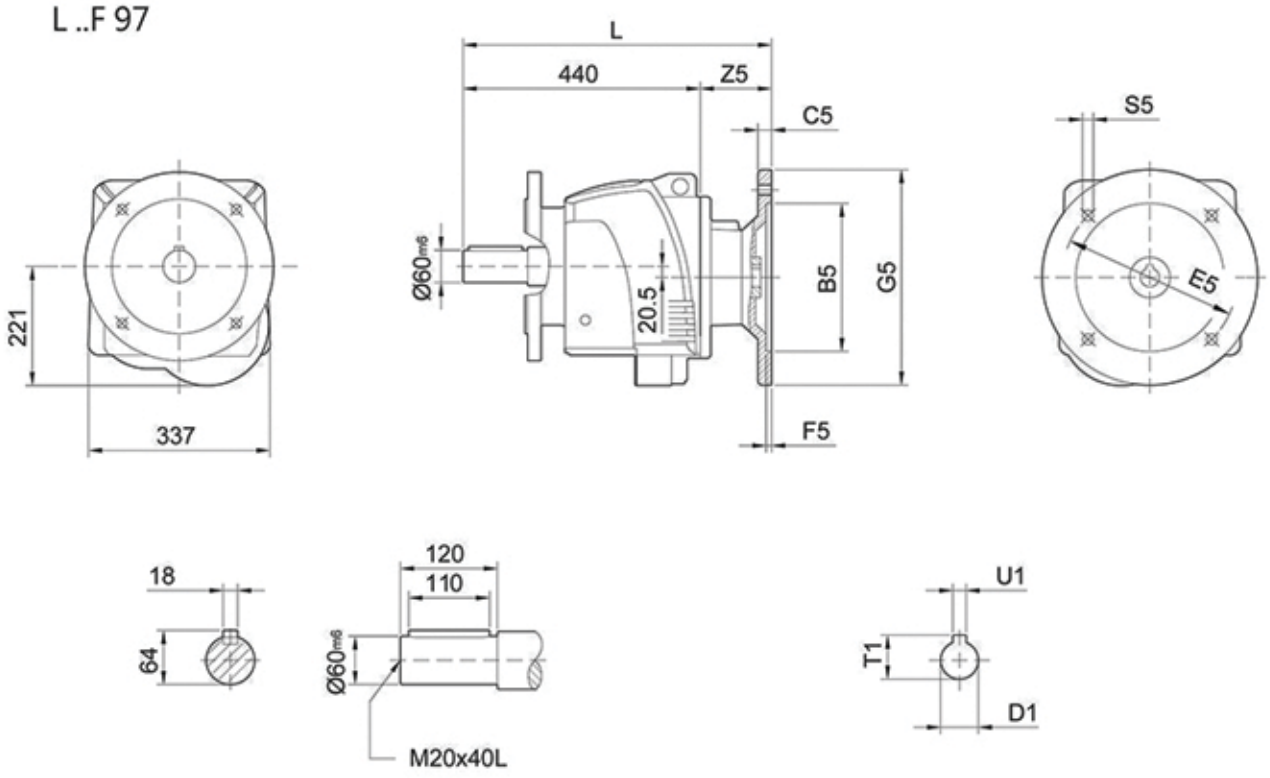

LVF 97

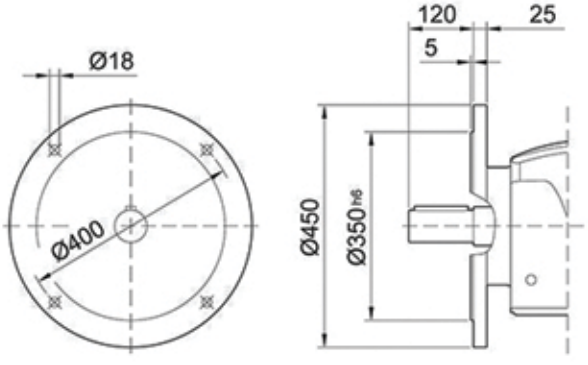

LWF 97

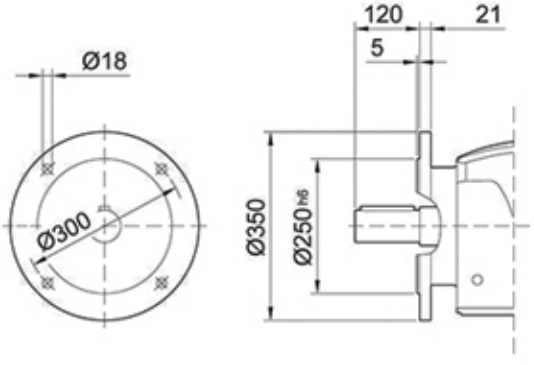

	B5	C5	E5	F5	G5	L	S5	Z5	D1	T1	U1
IEC 100	180	15	215	5	250	502	M12	62	28	31.3	8
IEC 112	180	15	215	5	250	502	M12	62	28	31.3	8
IEC 132	230	16	265	6	300	546.5	M12	106.5	38	41.3	10
IEC 160	250	20	300	6	350	582.5	M16	142.5	42	45.3	12
IEC 180	250	20	300	6	350	591.5	M16	151.5	48	51.8	14

M ..F 107

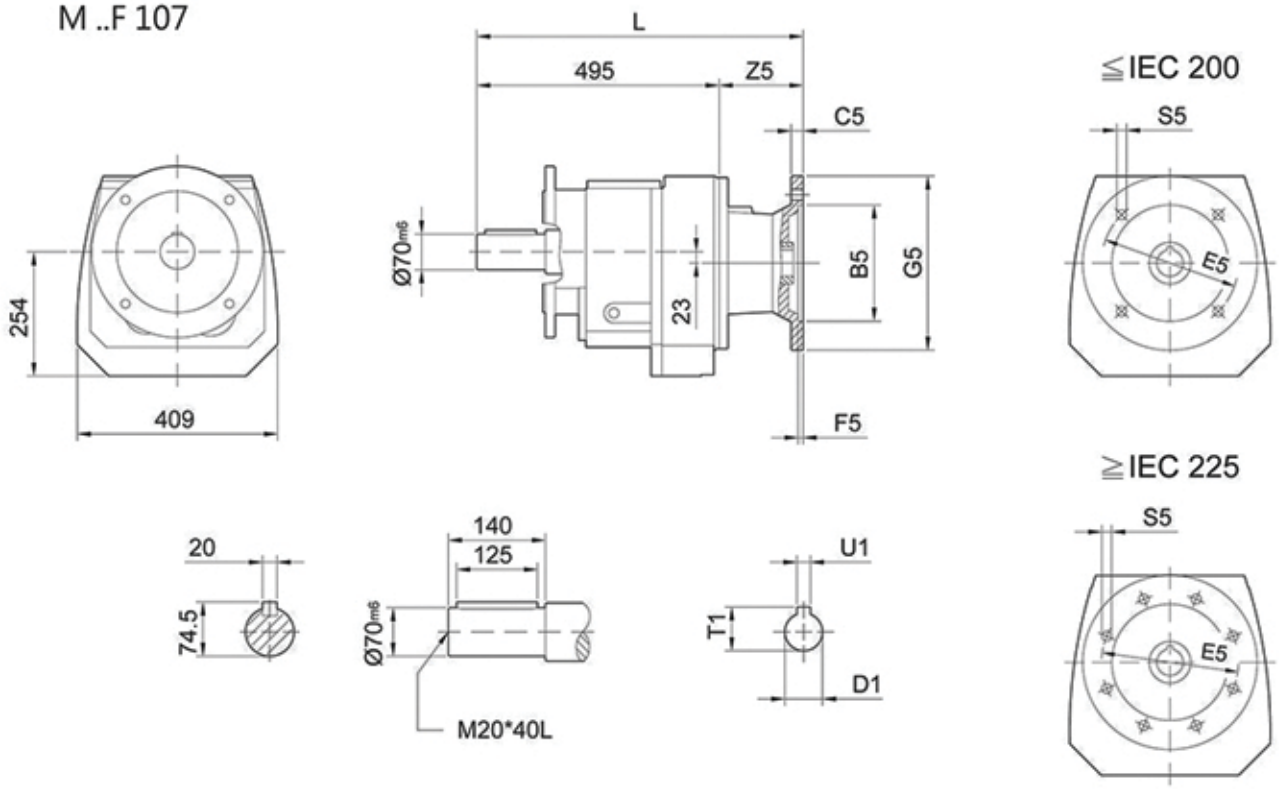

MVF 107

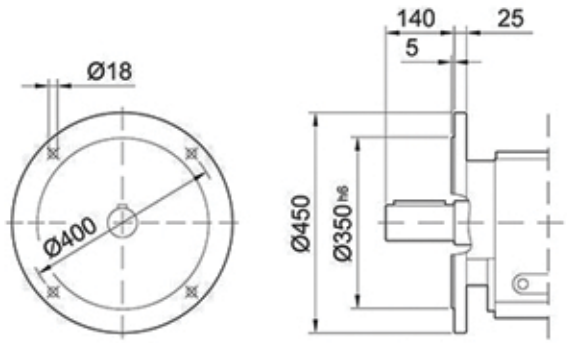

MWF 107

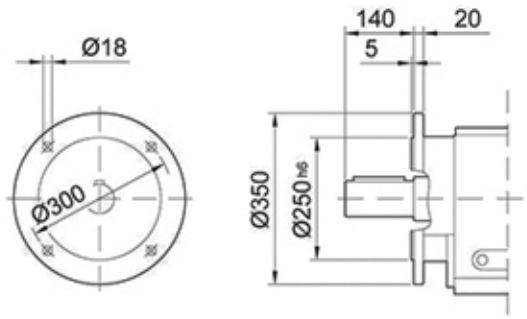

	B5	C5	E5	F5	G5	L	S5	Z5	D1	T1	U1
IEC 132	230	16	265	6	300	592	M12	97	38	41.3	10
IEC 160	250	20	300	6	350	628	M16	133	42	45.3	12
IEC 180	250	20	300	6	350	637	M16	142	48	51.8	14
IEC 200	300	20	350	6	400	637	M16	142	55	59.3	16
IEC 225	350	20	400	6	450	668	M16	173	60	64.4	18

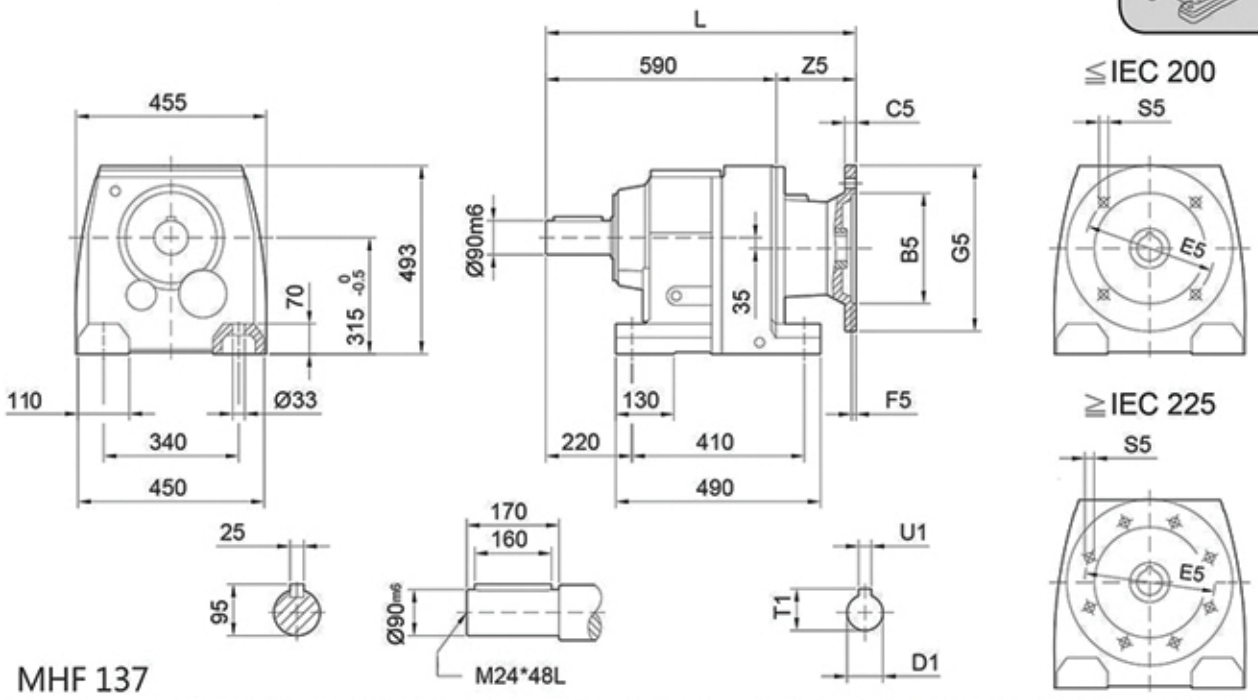

MHF 137

	B5	C5	E5	F5	G5	L	S5	Z5	D1	T1	U1
IEC 160	250	20	300	6	350	713	M16	123	42	45.3	12
IEC 180	250	20	300	6	350	721	M16	131	48	51.8	14
IEC 200	300	20	350	6	400	721	M16	131	55	59.3	16
IEC 225	350	20	400	6	450	752	M16	162	60	64.4	18
IEC 250	450	22	500	6	550	769	M16	179	65	69.4	18

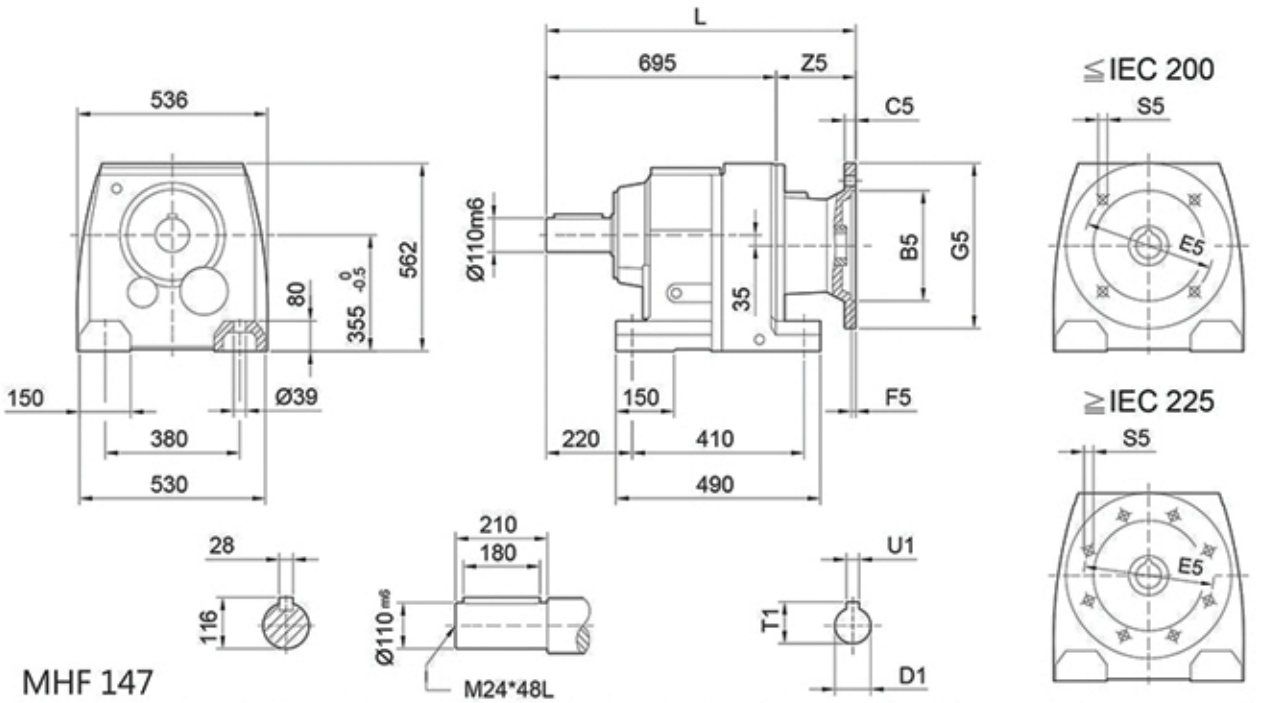

MHF 147

	B5	C5	E5	F5	G5	L	S5	Z5	D1	T1	U1
IEC 160	250	20	300	6	350	812	M16	115	42	45.3	12
IEC 180	250	20	300	6	350	820	M16	123	48	51.8	14
IEC 200	300	20	350	6	400	818	M16	123	55	59.3	16
IEC 225	350	20	400	6	450	855	M16	158	60	64.4	18
IEC 250	450	22	500	6	550	872	M16	175	65	69.4	18
IEC 280	450	22	500	6	550	872	M16	175	75	79.9	20

M ..F 137

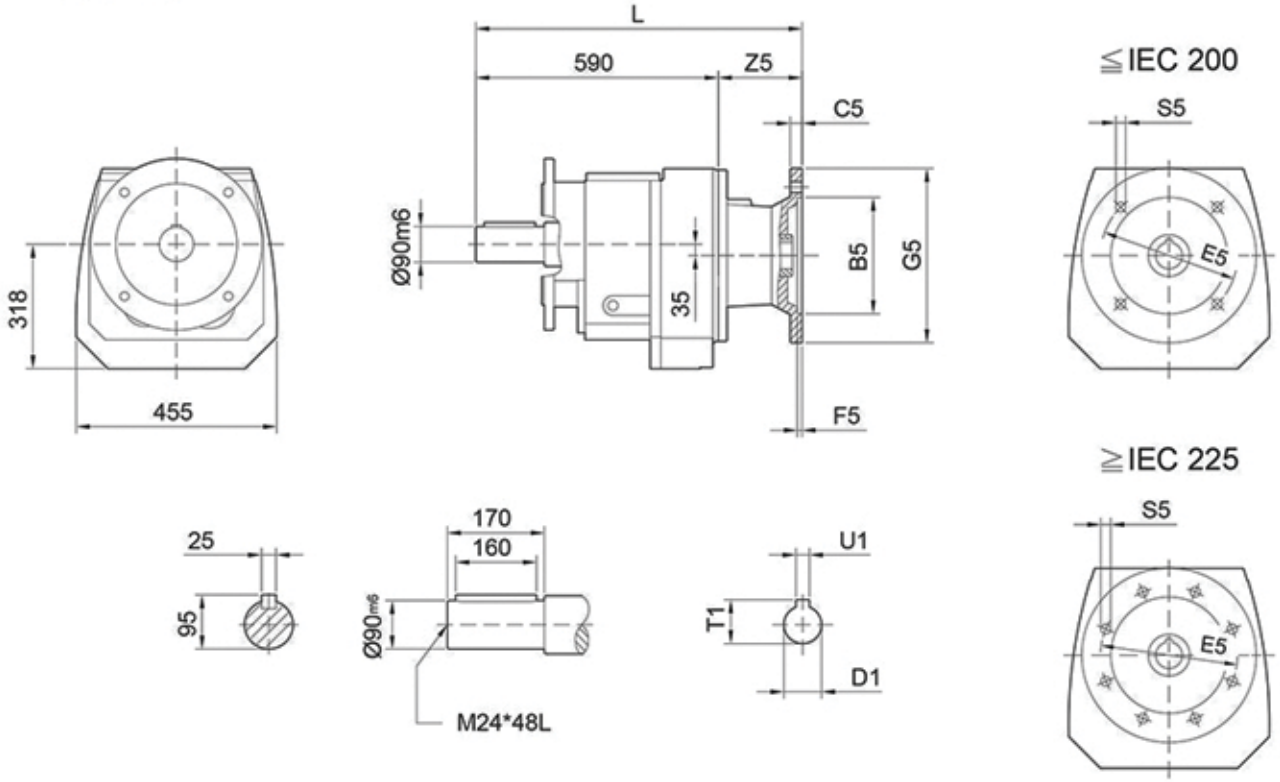

MVF 137

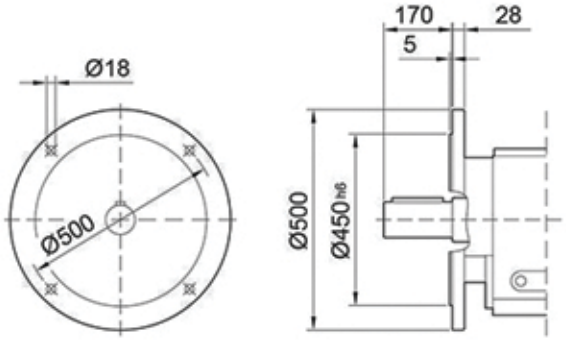

MWF 137

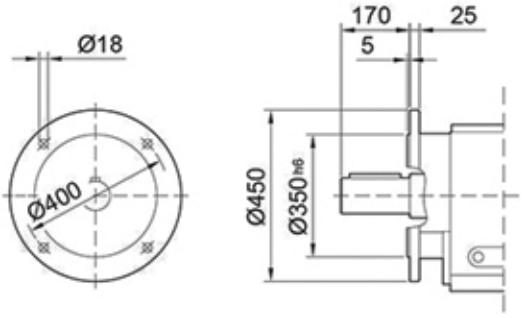

	B5	C5	E5	F5	G5	L	S5	Z5	D1	T1	U1
IEC 160	250	20	300	6	350	713	M16	123	42	45.3	12
IEC 180	250	20	300	6	350	721	M16	131	48	51.8	14
IEC 200	300	20	350	6	400	721	M16	131	55	59.3	16
IEC 225	350	20	400	6	450	752	M16	162	60	64.4	18
IEC 250	450	22	500	6	550	769	M16	179	65	69.4	18

M ..F 147

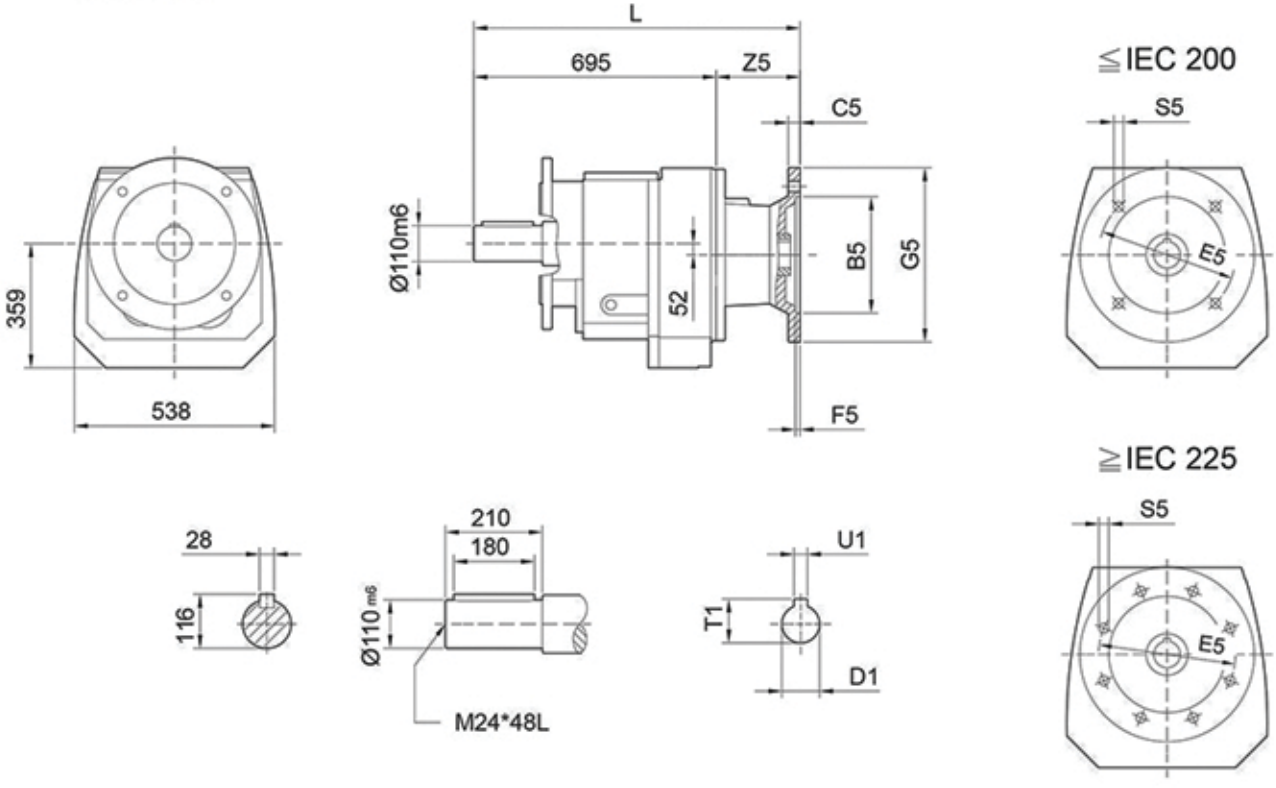

MVF 147

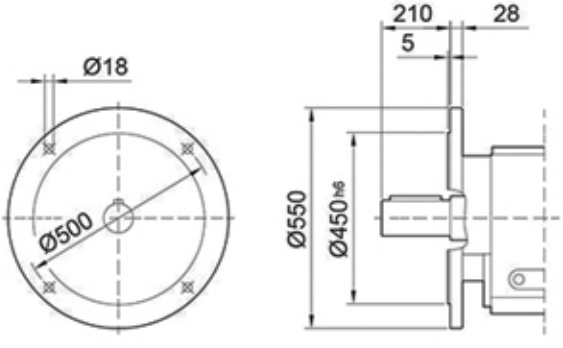

MWF 147

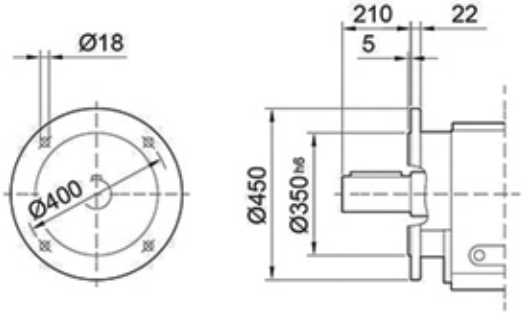

	B5	C5	E5	F5	G5	L	S5	Z5	D1	T1	U1
IEC 160	250	20	300	6	350	812	M16	115	42	45.3	12
IEC 180	250	20	300	6	350	820	M16	123	48	51.8	14
IEC 200	300	20	350	6	400	818	M16	123	55	59.3	16
IEC 225	350	20	400	6	450	855	M16	158	60	64.4	18
IEC 250	450	22	500	6	550	872	M16	175	65	69.4	18
IEC 280	450	22	500	6	550	872	M16	175	75	79.9	20

MHF 167

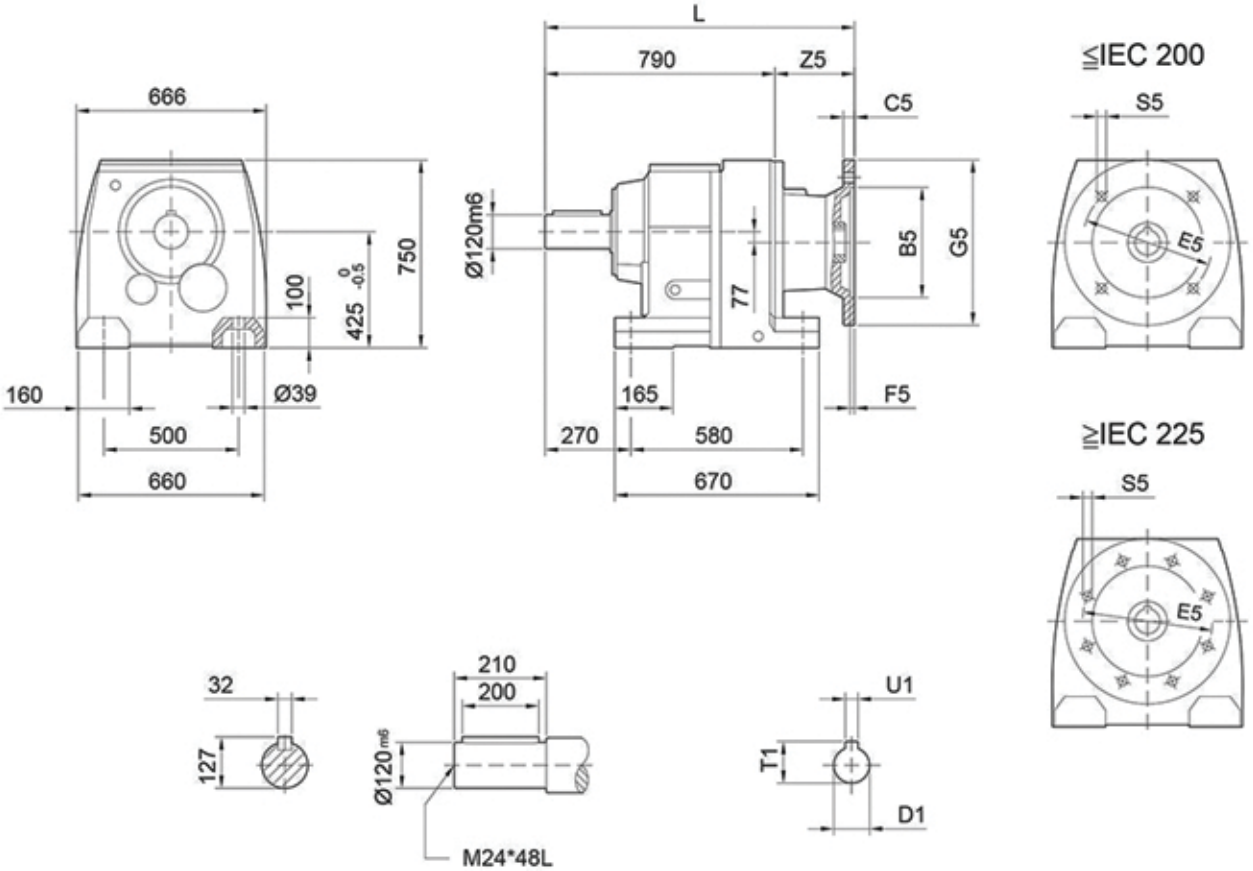

	B5	C5	E5	F5	G5	L	S5	Z5	D1	T1	U1
IEC 160	250	20	300	6	350	904	M16	114	42	45.3	12
IEC 180	250	20	300	6	350	913	M16	123	48	51.8	14
IEC 200	300	20	350	6	400	913	M16	123	55	59.4	16
IEC 225	350	20	400	6	450	939	M16	149	60	64.4	18
IEC 250	450	22	500	6	550	956	M16	166	65	69.5	18
IEC 280	450	22	500	6	550	996	M16	206	75	80.0	20
IEC 315	550	22	600	6	660	1010	Ø24	220	85	90.4	22

M ..F 167

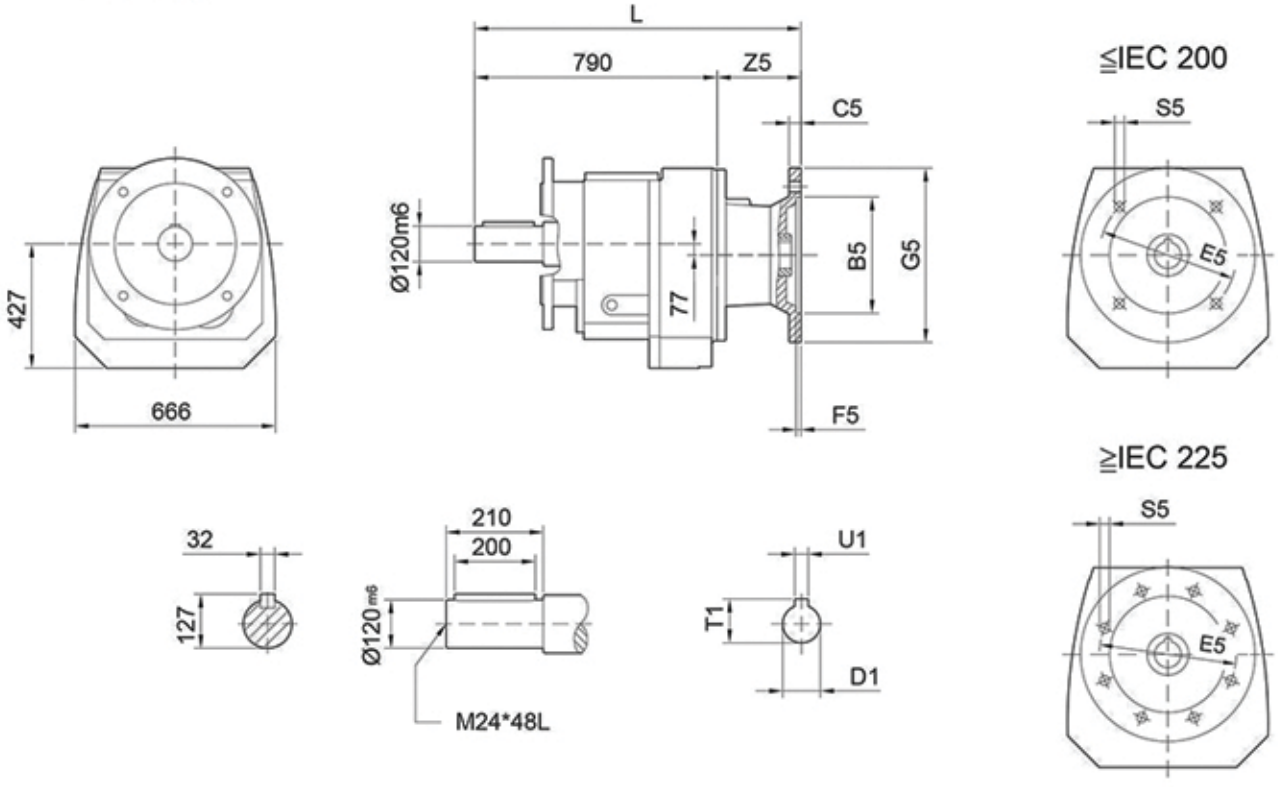

MVF 167

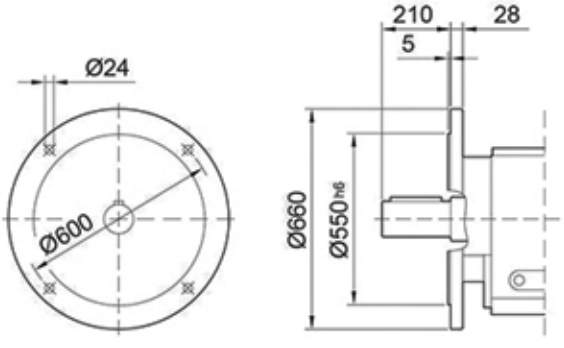

	B5	C5	E5	F5	G5	L	S5	Z5	D1	T1	U1
IEC 160	250	20	300	6	350	904	M16	114	42	45.3	12
IEC 180	250	20	300	6	350	913	M16	123	48	51.8	14
IEC 200	300	20	350	6	400	913	M16	123	55	59.4	16
IEC 225	350	20	400	6	450	939	M16	149	60	64.4	18
IEC 250	450	22	500	6	550	956	M16	166	65	69.5	18
IEC 280	450	22	500	6	550	996	M16	206	75	80.0	20
IEC 315	550	22	600	6	660	1010	Ø24	220	85	90.4	22

RX..

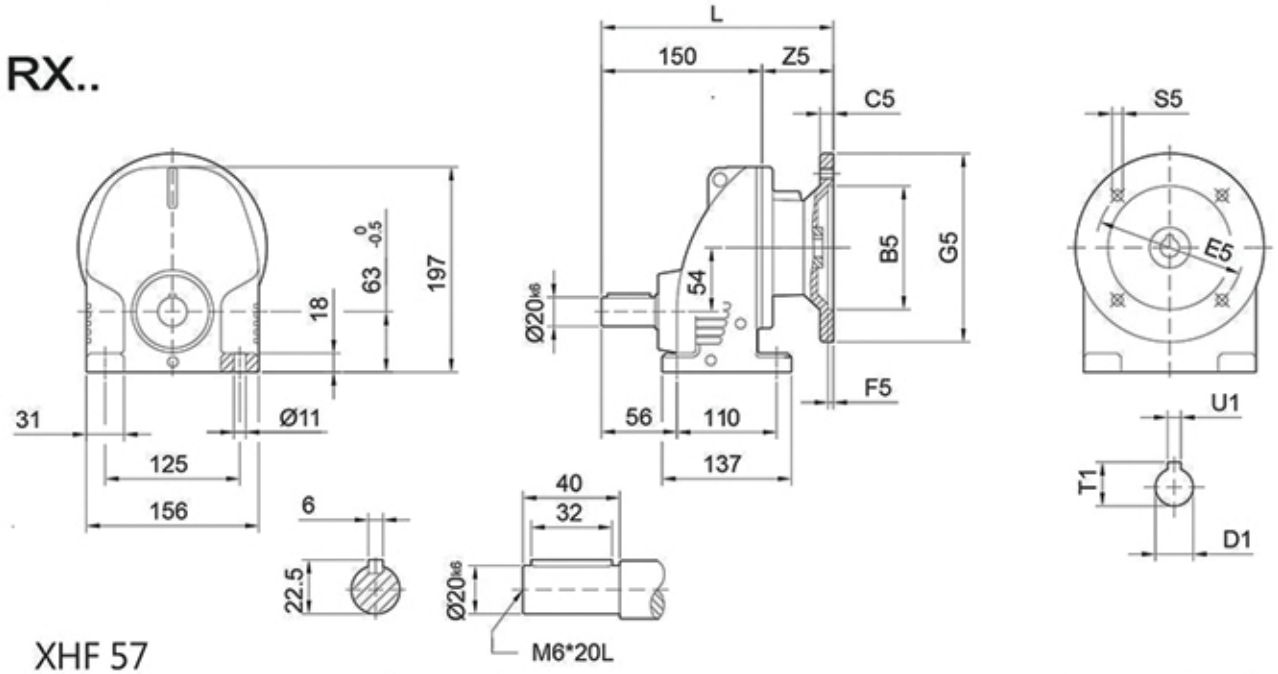

XHF 57

	B5	C5	E5	F5	G5	L	S5	Z5	D1	T1	U1
IEC 63	95	10	115	4	140	198.5	M8	48.5	11	12.8	4
IEC 71	110	10	130	4	160	198.5	M8	48.5	14	16.3	5
IEC 80	130	12	165	5	200	216.5	M10	66.5	19	21.8	6
IEC 90	130	12	165	5	200	216.5	M10	66.5	24	27.3	8
IEC 100	180	15	215	5	250	233	M12	83	28	31.3	8

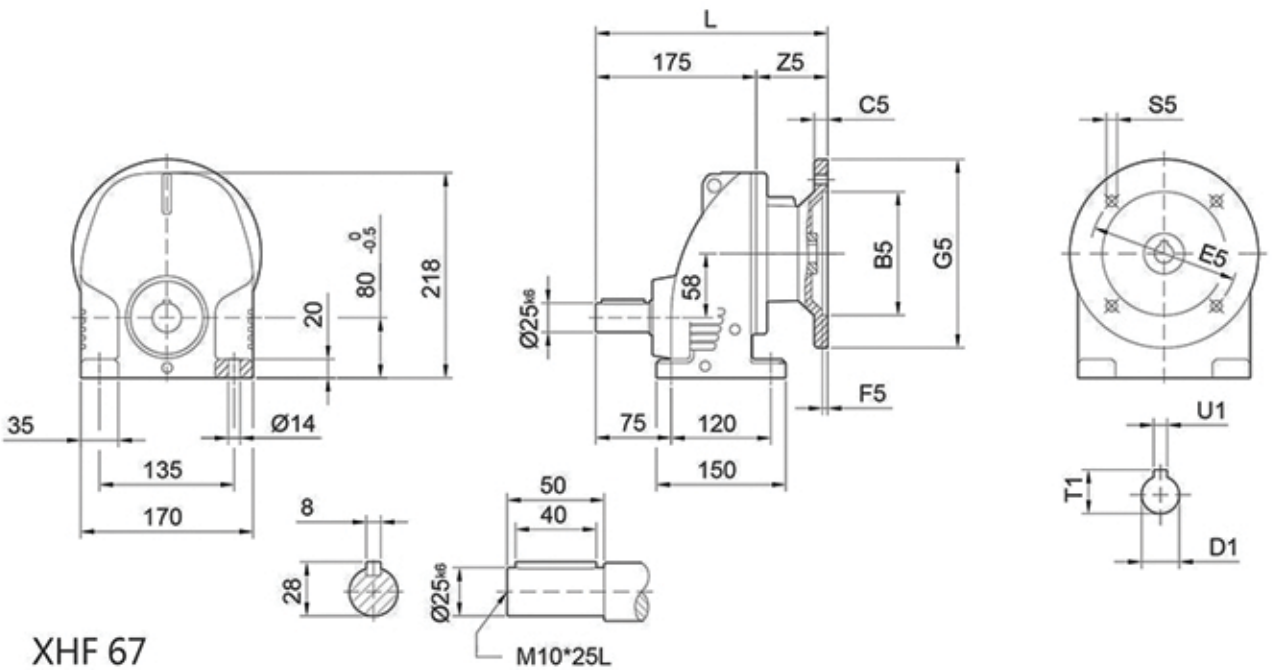

XHF 67

	B5	C5	E5	F5	G5	L	S5	Z5	D1	T1	U1
IEC 63	95	10	115	4	140	221.5	M8	46.5	11	12.8	4
IEC 71	110	10	130	4	160	221.5	M8	46.5	14	16.3	5
IEC 80	130	12	165	5	200	239.5	M10	64.5	19	21.8	6
IEC 90	130	12	165	5	200	239.5	M10	64.5	24	27.3	8
IEC 100	180	15	215	5	250	256	M12	81	28	31.3	8
IEC 112	180	15	215	5	250	256	M12	81	28	31.3	8

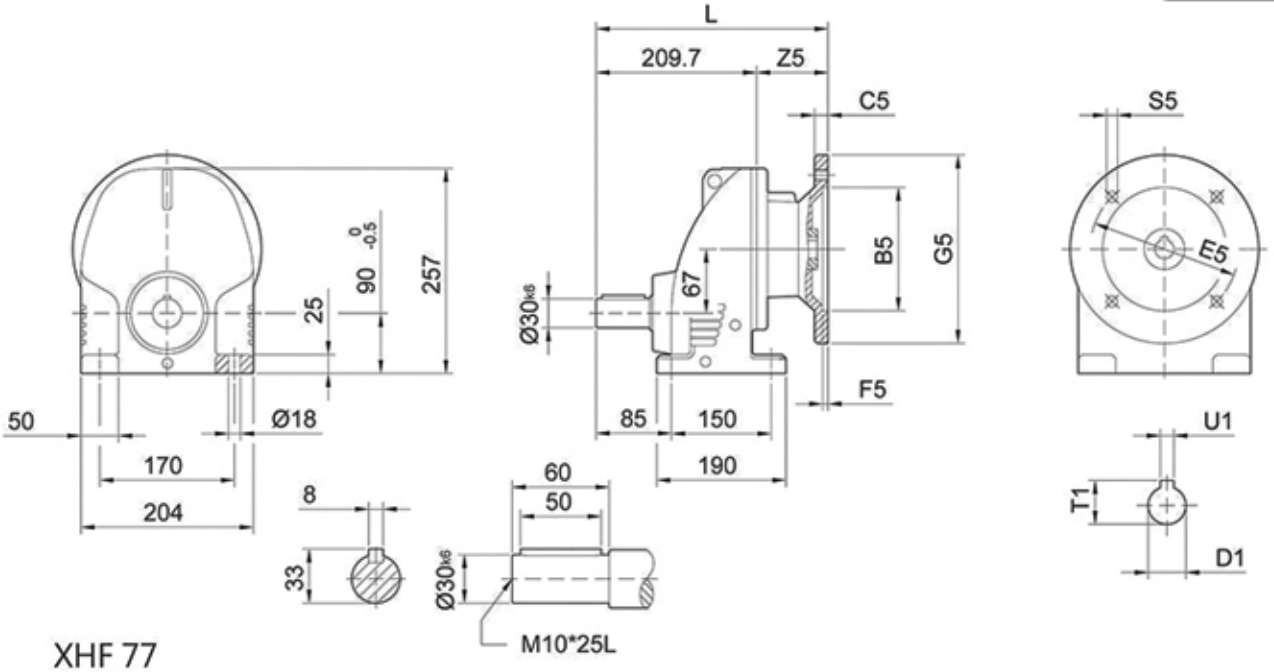

XHF 77

	B5	C5	E5	F5	G5	L	S5	Z5	D1	T1	U1
IEC 80	130	12	165	5	200	268.7	M10	59	19	21.8	6
IEC 90	130	12	165	5	200	268.7	M10	59	24	27.3	8
IEC 100	180	15	215	5	250	285.2	M12	75.5	28	31.3	8
IEC 112	180	15	215	5	250	285.2	M12	75.5	28	31.3	8
IEC 132	230	16	265	6	300	333.7	M12	124	38	41.3	10

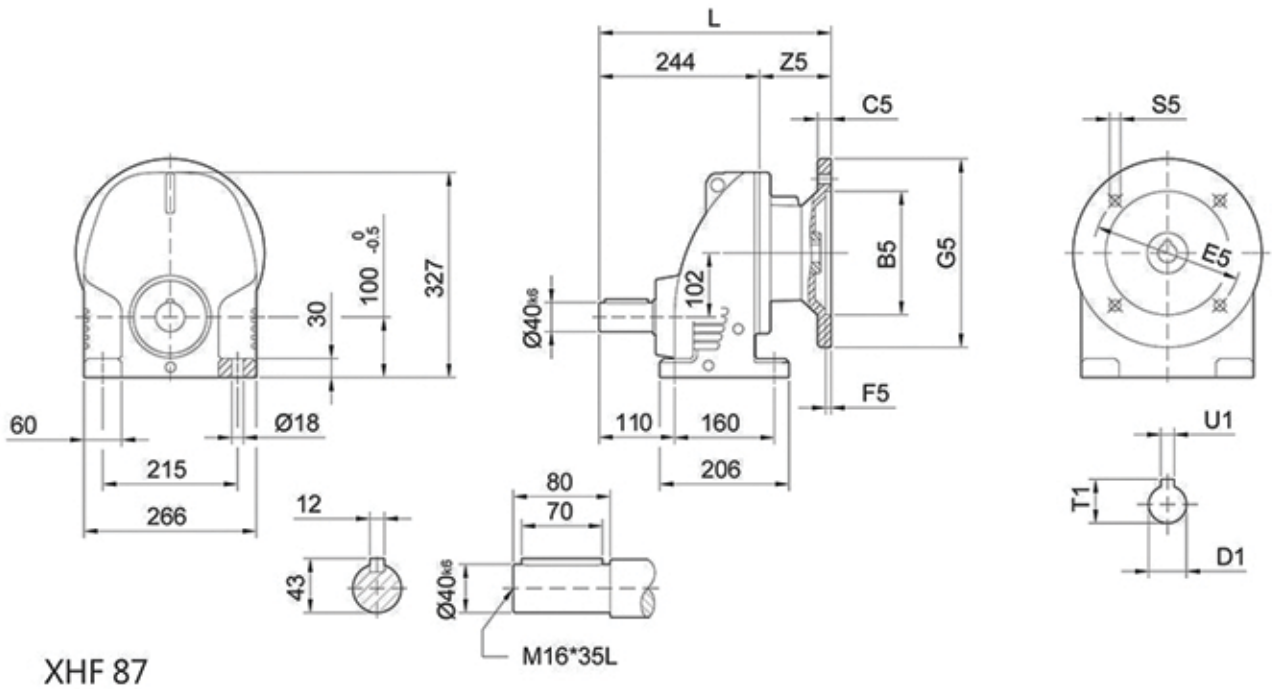

XHF 87

	B5	C5	E5	F5	G5	L	S5	Z5	D1	T1	U1
IEC 100	180	15	215	5	250	310	M12	66	28	31.3	8
IEC 112	180	15	215	5	250	310	M12	66	28	31.3	8
IEC 132	230	16	265	6	300	358.5	M12	114.5	38	41.3	10
IEC 160	250	20	300	6	350	394.5	M16	150.5	42	45.3	12

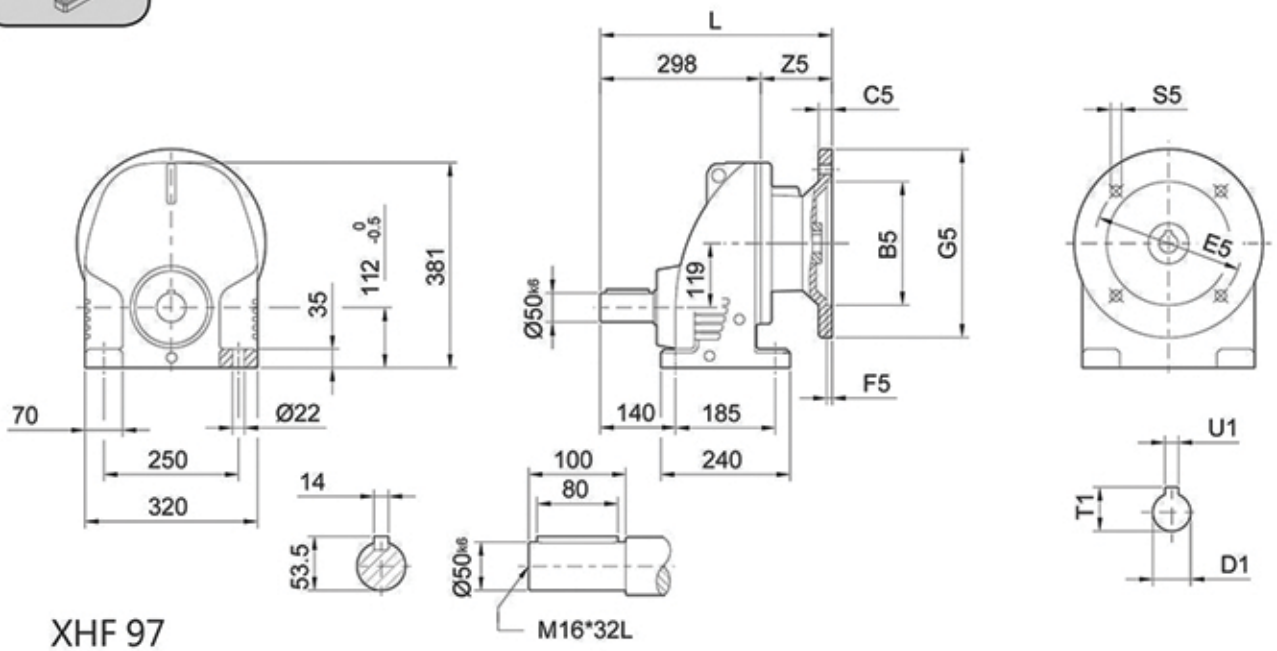

XHF 97

	B5	C5	E5	F5	G5	L	S5	Z5	D1	T1	U1
IEC 100	180	15	215	5	250	360	M12	62	28	31.3	8
IEC 112	180	15	215	5	250	360	M12	62	28	31.3	8
IEC 132	230	16	265	6	300	404.5	M12	106.5	38	41.3	10
IEC 160	250	20	300	6	350	440.5	M16	142.5	42	45.5	12
IEC 180	250	20	300	6	350	449.5	M16	151.5	48	51.8	14

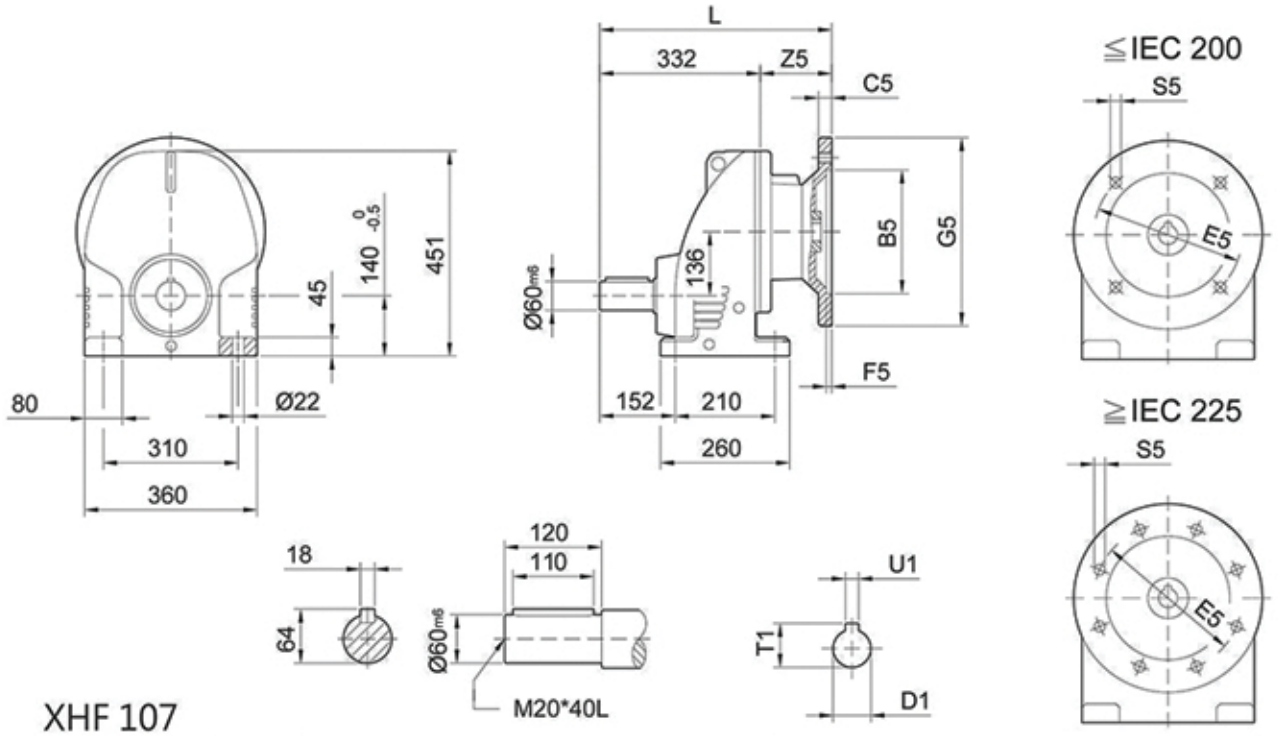

XHF 107

	B5	C5	E5	F5	G5	L	S5	Z5	D1	T1	U1
IEC 100	180	15	215	5	250	394	M12	62	28	31.3	8
IEC 112	180	15	215	5	250	394	M12	62	28	31.3	8
IEC 132	230	16	265	6	300	429	M12	97	38	41.3	10
IEC 160	250	20	300	6	350	465	M16	133	42	45.5	12
IEC 180	250	20	300	6	350	474	M16	142	48	51.8	14
IEC 200	300	20	350	6	400	474	M16	142	55	59.3	16
IEC 225	350	20	400	6	450	505	M16	173	60	64.4	18

Solid Input Shaft

L..D

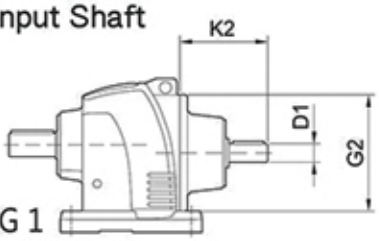

FIG 1

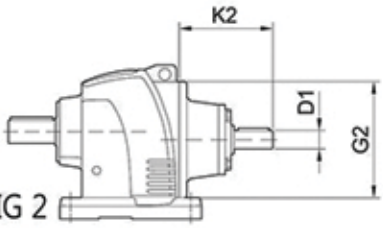

FIG 2

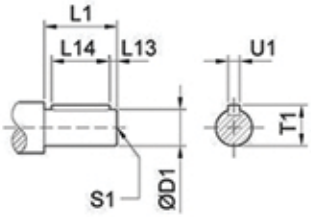

	D1	L1	L13	L14	T1	U1	S1	K2	G2	FIG
L..37	16k6	40	4	32	18	5	M5*10L	88	120	1
	19k6	40	4	32	21.5	6	M6*12L	90.5	120	1
L..47	16k6	40	4	32	18	5	M5*10L	83.5	160	1
	19k6	40	4	32	21.5	6	M6*12L	86	160	1
	24k6	50	5	40	27	8	M8*16L	96	160	1
L..57	16k6	40	4	32	18	5	M5*10L	83.5	160	1
	19k6	40	4	32	21.5	6	M6*12L	86	160	1
	24k6	50	5	40	27	8	M8*16L	96	160	1
L..67	19k6	40	4	32	21.5	6	M6*12L	95	160	2
	24k6	50	5	40	27	8	M8*16L	119.5	160	2
L..77	19k6	40	4	32	21.5	6	M6*12L	89.5	200	2
	19k6	40	4	32	21.5	6	M6*12L	106	200	2
	24k6	50	5	40	27	8	M8*16L	114	200	2
	38k6	80	5	70	41	10	M12*24L	177	200	2
L..87	19k6	40	4	32	21.5	6	M6*12L	95.5	250	2
	28k6	60	5	50	31	8	M8*16L	114.5	250	2
	38k6	80	5	70	41	10	M12*24L	167.5	250	2
	42k6	110	10	70	45	12	M16*32L	240.5	250	2
L..97	28k6	60	5	50	31	8	M8*16L	110.5	300	2
	38k6	80	5	70	41	10	M12*24L	159.5	300	2
	42k6	110	10	70	45	12	M16*32L	232.5	300	2
	48k6	110	10	80	51.5	14	M16*32L	237.5	300	2

Solid Input Shaft

M..D

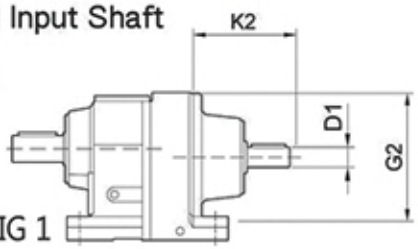

FIG 1

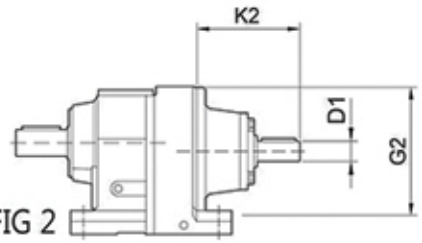

FIG 2

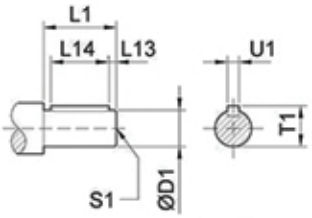

	D1	L1	L13	L14	T1	U1	S1	K2	G2	FIG
M..17	16k6	40	4	32	18	5	M5*10L	99	120	1
M..107	28k6	60	5	50	31	8	M8*16L	110.5	350	2
	38k6	80	5	70	41	10	M12*24L	150	350	2
	42k6	110	10	70	45	12	M16*32L	223	350	2
	48k6	110	10	80	51.5	14	M16*32L	228	350	2
M..137	42k6	110	10	70	45	12	M16*32L	223	350	2
	48k6	110	10	80	51.5	14	M16*32L	217	350	2
	55m6	110	10	90	59	16	M20*40L	259	400	2
M..147	42k6	110	10	70	45	12	M16*32L	205	350	2
	48k6	110	10	80	51.5	14	M16*32L	209	350	2
	55m6	110	10	90	59	16	M20*40L	255	450	2
	70m6	140	15	110	74.5	20	M20*40L	322	450	2
M..167	42k6	110	10	70	45	12	M16*32L	204	550	2
	48k6	110	10	80	51.5	14	M16*32L	209	550	2
	55m6	110	10	90	59	16	M20*40L	246	550	2
	70m6	140	15	110	74.5	20	M20*40L	315.5	550	2

Solid Input Shaft

X..D

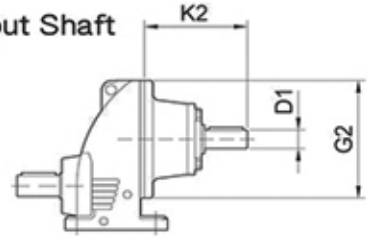

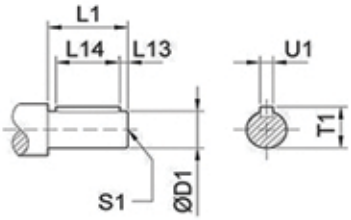

	D1	L1	L13	L14	T1	U1	S1	K2	G2
X..57	19k6	40	4	32	21.5	6	M6*12L	86	160
	24k6	50	5	40	27	8	M8*16L	96	160
X..67	19k6	40	4	32	21.5	6	M6*12L	115.5	160
	24k6	50	5	40	27	8	M8*16L	119.5	160
X..77	19k6	40	4	32	21.5	6	M6*12L	89.5	200
	19k6	40	4	32	21.5	6	M6*12L	106	200
	24k6	50	5	40	27	8	M8*16L	114	200
	38k6	80	5	70	41	10	M12*24L	177	200
X..87	19k6	40	4	32	21.5	6	M6*12L	95.5	250
	28k6	60	5	50	31	8	M8*16L	114.5	250
	38k6	80	5	70	41	10	M12*24L	167.5	250
	42k6	110	10	70	45	12	M16*32L	240.5	250
X..97	28k6	60	5	50	31	8	M8*16L	110.5	300
	38k6	80	5	70	41	10	M12*24L	159.5	300
	42k6	110	10	70	45	12	M16*32L	232.5	300
	48k6	110	10	80	51.5	14	M16*32L	237.5	300
X..107	28k6	60	5	50	31	8	M8*16L	110.5	350
	38k6	80	5	70	41	10	M12*24L	150	350
	42k6	110	10	70	45	12	M16*32L	223	350
	48k6	110	10	80	51.5	14	M16*32L	228	350

Couple With Motor

L..M

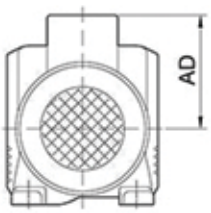

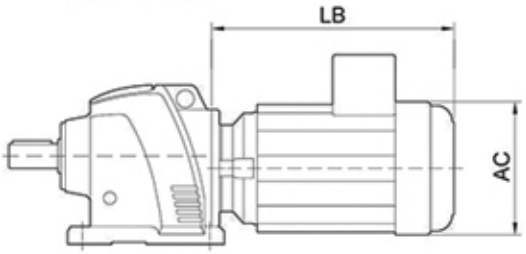

	MOTOR	AC	AD	LB
L..37	63	120	108	231.5
	71	136	116	247.5
	80	160	127	309
	90	176	139	354.5
L..47	63	120	108	227
	71	136	116	243
	80	160	127	304.5
	90	176	139	350
	100	198	149	398
	112	220	167	410
L..57	63	120	108	227
	71	136	116	243
	80	160	127	304.5
	90	176	139	350
	100	198	149	398
	112	220	167	410
L..67	63	120	108	225
	71	136	116	241
	80	160	127	302.5
	90	176	139	348
	100	198	149	396
	112	220	167	408
L..77	71	136	116	239
	80	160	127	297
	90	176	139	342.5
	100	198	149	390.5
	112	220	167	402.5
	132	258	184.5	441

	MOTOR	AC	AD	LB
L..87	80	160	127	287.5
	90	176	139	333
	100	198	149	381
	112	220	167	393
	132S	258	184.5	431.5
	132M	258	184.5	469.5
	160M	343	286	550
L..97	100	198	149	377
	112	220	167	389
	132S	258	184.5	423.5
	132M	258	184.5	461.5
	160M	334	286	542
	160L	334	286	586
	180M	382	305	607.5

Couple With Motor

M..M

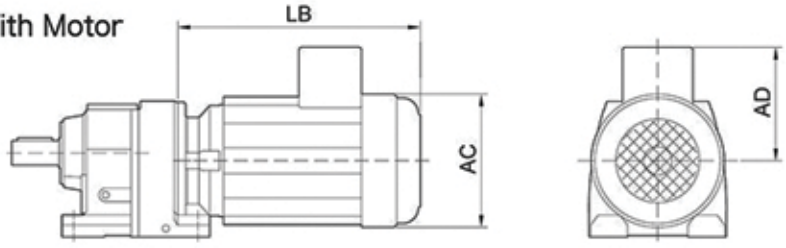

	MOTOR	AC	AD	LB
M..17	63	108	108	249
	71	136	116	265
	80	160	127	362.5
M..107	132S	258	184.5	414
	132M	258	184.5	452
	160M	334	286	532.5
	160L	334	286	576.5
	180M	382	350	598
	180L	382	350	598
	220L	382	350	636
	225S	458	362	713
	225M	458	362	713
M..137	160M	334	286	521.5
	160L	334	286	565.5
	180M	382	350	587
	180L	382	350	587
	220L	382	350	625
	225S	458	362	702
	225M	458	362	702

Couple With Motor

X..M

	MOTOR	AC	AD	LB
X..57	63	120	108	225
	71	136	116	241
	80	160	127	302.5
	90	176	139	348
	100	198	149	396
	112	220	167	408
X..67	63	120	108	225
	71	136	116	241
	80	160	127	302.5
	90	176	139	348
	100	198	149	396
	112	220	167	408
X..77	71	160	127	297
	80	176	139	342.5
	90	198	149	390.5
	100	220	167	402.5
	112	258	184.5	441
	132S	258	184.5	441
X..87	80	160	127	287.5
	90	176	139	333
	100	198	149	381
	112	220	167	393
	132S	258	184.5	431.5
	132M	258	184.5	469.5
	160M	343	263	550

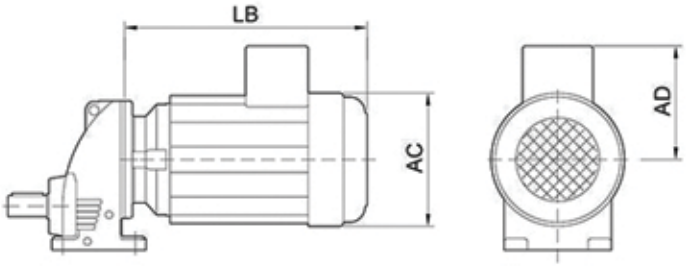

	MOTOR	AC	AD	LB
X..97	100	198	149	377
	112	220	167	389
	132S	258	184.5	423.5
	132M	258	184.5	461.5
	160M	334	263	542
	160L	334	286	586
	180M	382	305	607.5
X..107	132S	258	184.5	414
	132M	258	184.5	452
	160M	334	286	532.5
	160L	334	286	576.5
	180M	382	350	598
	180L	382	350	598
	220L	382	350	636
	225S	458	362	713
	225M	458	362	713

Double Reduction

LNF/MNF

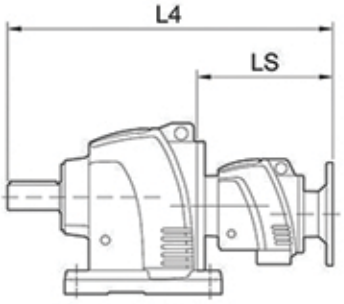

		LS	L4
L..47-37	IEC 63	219	458
	IEC 71	219	458
	IEC 80	237	476
	IEC 90L	237	476
L..57-37	IEC 63	219	476
	IEC 71	219	476
	IEC 80	237	494
	IEC 90L	237	494
L..67-37	IEC 63	217	496
	IEC 71	217	496
	IEC 80	235	514
	IEC 90L	235	514
L..77-37	IEC 63	211.5	514
	IEC 71	211.5	514
	IEC 80	229.5	532
	IEC 90L	229.5	532
L..87-57	IEC 63	249.5	621.5
	IEC 71	249.5	621.5
	IEC 80	267.5	639.5
	IEC 90L	267.5	639.5
	IEC 100L	284	656
	IEC 112M	284	656
L..97-57	IEC 63	241.5	681.5
	IEC 71	241.5	681.5
	IEC 80	259.5	699.5
	IEC 90L	259.5	699.5
	IEC 100L	276	716
	IEC 112M	276	716
M..107-77	IEC 71	290.5	785.5
	IEC 80	298.5	793.5
	IEC 90L	298.5	793.5
	IEC 100L	315	810
	IEC 112M	315	810
	IEC 132S	363.5	858.5

LXF/MXF

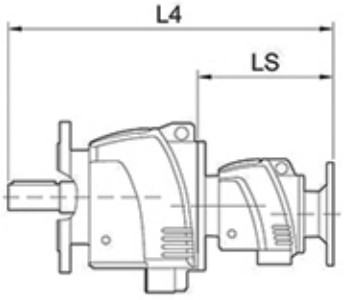

		LS	L4
M..137-77	IEC 71	279.5	869.5
	IEC 80	287.5	877.5
	IEC 90L	287.5	877.5
	IEC 100L	304	894
	IEC 112M	304	894
	IEC 132S	352.5	942.5
M..147-77	IEC 71	279.5	974.5
	IEC 80	287.5	982.5
	IEC 90L	287.5	982.5
	IEC 100L	304	999
	IEC 112M	304	999
	IEC 132S	352.5	1047.5
M..147-87	IEC 80	343	1038
	IEC 90L	343	1038
	IEC 100L	344	1039
	IEC 112M	344	1039
	IEC 132S	392.5	1087.5
	IEC 132M	392.5	1087.5
	IEC 160M	428.5	1123.5
M..167-97	IEC 100L	387	1177
	IEC 112M	387	1177
	IEC 132S	431.5	1221.5
	IEC 132M	431.5	1221.5
	IEC 160M	467.5	1257.5
	IEC 160L	467.5	1257.5
	IEC 180M	476	1266
M..167-107	IEC 100L	427	1217
	IEC 112M	427	1217
	IEC 132S	462	1252
	IEC 132M	462	1252
	IEC 160M	498	1288
	IEC 160L	498	1288
	IEC 180M	507	1297